INTERNATIONAL STANDARD

ISO 8434-1

Third edition
2018-07

Corrected version
2018-10

Metallic tube connections for fluid power and general use —

Part 1: 24° cone connectors

Raccordements de tubes métalliques pour transmissions hydrauliques et pneumatiques et applications générales —

Partie 1: Raccords coniques à 24°

Reference number
ISO 8434-1:2018(E)

ISO copyright office
CP 401 • Ch. de Blandonnet 8
CH-1214 Vernier, Geneva
Phone: +41 22 749 01 11
Fax: +41 22 749 09 47
Email: copyright@iso.org
Website: www.iso.org

Published in Switzerland

Contents

Page

Foreword

ISO (the International Organization for Standardization) is a worldwide federation of national standards bodies (ISO member bodies). The work of preparing International Standards is normally carried out through ISO technical committees. Each member body interested in a subject for which a technical committee has been established has the right to be represented on that committee. International organizations, governmental and non-governmental, in liaison with ISO, also take part in the work. ISO collaborates closely with the International Electrotechnical Commission (IEC) on all matters of electrotechnical standardization.

The procedures used to develop this document and those intended for its further maintenance are described in the ISO/IEC Directives, Part 1. In particular the different approval criteria needed for the different types of ISO documents should be noted. This document was drafted in accordance with the editorial rules of the ISO/IEC Directives, Part 2 (see www.iso.org/directives).

Attention is drawn to the possibility that some of the elements of this document may be the subject of patent rights. ISO shall not be held responsible for identifying any or all such patent rights. Details of any patent rights identified during the development of the document will be in the Introduction and/or on the ISO list of patent declarations received (see www.iso.org/patents).

Any trade name used in this document is information given for the convenience of users and does not constitute an endorsement.

For an explanation on the voluntary nature of standards, the meaning of ISO specific terms and expressions related to conformity assessment, as well as information about ISO's adherence to the World Trade Organization (WTO) principles in the Technical Barriers to Trade (TBT) see the following URL: www.iso.org/iso/foreword.html.

This document was prepared by Technical Committee ISO/TC 131, *Fluid power systems*, Subcommittee SC 4, *Connectors and similar products and components*.

This third edition cancels and replaces the second edition (ISO 8434-1:2007), which has been technically revised.

A list of all the parts in the ISO 8434 series, can be found on the ISO website.

This corrected version of ISO 8434-1:2018 incorporates the following corrections:

— Table 4: missing data in the Thread column of Series L and S has been inserted.

— Table 21: missing data in the s_1 column of Series L and S has been inserted.

Introduction

In fluid power systems, power is transmitted and controlled through a fluid (liquid or gas) under pressure within an enclosed circuit. In general applications, a fluid may be conveyed under pressure.

Components may be connected through their ports by connections (connectors) and conductors (tubes and hoses). Tubes are rigid conductors; hoses are flexible conductors.

Metallic tube connections for fluid power and general use —

Part 1: 24° cone connectors

1 Scope

This document specifies the general and dimensional requirements for 24° cone connectors using cutting ring and O-ring seal cone (referred to as DKO) suitable for use with ferrous and non-ferrous tubes with outside diameters from 4 mm to 42 mm inclusive. These connectors are for use in fluid power and general applications within the limits of pressure and temperature specified in this document.

They are intended for the connection of plain end tubes and hose fittings to ports in accordance with ISO 6149-1, ISO 1179-1 and ISO 9974-1. (See ISO 12151-2 for a related hose fitting specification.)

These connectors provide full-flow connections in hydraulic systems operating to the working pressures shown in Table 1. Because many factors influence the pressure at which a system performs satisfactorily, these values are not intended to be understood as guaranteed minimums. For every application, sufficient testing is meant to be conducted and reviewed by both the user and manufacturer to ensure that required performance levels are met.

NOTE 1 For new designs in hydraulic fluid power applications, see the requirements given in 9.6. Where the requirements of the application allow for the use of elastomeric seals, connector designs that conform to International Standards and incorporate elastomeric sealing are preferred.

NOTE 2 For use under conditions outside the pressure and/or temperature limits specified, see 5.4.

This document also specifies a performance and qualification test for these connectors.

2 Normative references

The following documents are referred to in the text in such a way that some or all of their content constitutes requirements of this document. For dated references, only the edition cited applies. For undated references, the latest edition of the referenced document (including any amendments) applies.

ISO 48, *Rubber, vulcanized or thermoplastic — Determination of hardness (hardness between 10 IRHD and 100 IRHD)*

ISO 228-1, *Pipe threads where pressure-tight joints are not made on the threads — Part 1: Dimensions, tolerances and designation*

ISO 724, *ISO general-purpose metric screw threads — Basic dimensions*

ISO 965-1, *ISO general purpose metric screw threads — Tolerances — Part 1: Principles and basic data*

ISO 1127, *Stainless steel tubes — Dimensions, tolerances and conventional masses per unit length*

ISO 1179-1, *Connections for general use and fluid power — Ports and stud ends with ISO 228-1 threads with elastomeric or metal-to-metal sealing — Part 1: Threaded ports*

ISO 1179-2, *Connections for general use and fluid power — Ports and stud ends with ISO 228-1 threads with elastomeric or metal-to-metal sealing — Part 2: Heavy-duty (S series) and light-duty (L series) stud ends with elastomeric sealing (type E)*

ISO 1179-4, *Connections for general use and fluid power — Ports and stud ends with ISO 228-1 threads with elastomeric or metal-to-metal sealing — Part 4: Stud ends for general use only with metal-to-metal sealing (type B)*

ISO 3304, *Plain end seamless precision steel tubes — Technical conditions for delivery*

ISO 3305, *Plain end welded precision steel tubes — Technical conditions for delivery*

ISO 3601-3, *Fluid power systems — O-rings — Part 3: Quality acceptance criteria*

ISO 4759-1:2000, *Tolerances for fasteners — Part 1: Bolts, screws, studs and nuts — Product grades A, B and C*

ISO 5598:2008, *Fluid power systems and components — Vocabulary*

ISO 6149-1, *Connections for hydraulic fluid power and general use — Ports and stud ends with ISO 261 metric threads and O-ring sealing — Part 1: Ports with truncated housing for O-ring seal*

ISO 6149-2, *Connections for hydraulic fluid power and general use — Ports and stud ends with ISO 261 metric threads and O-ring sealing — Part 2: Dimensions, design, test methods and requirements for heavy-duty (S series) stud ends*

ISO 6149-3, *Connections for hydraulic fluid power and general use — Ports and stud ends with ISO 261 metric threads and O-ring sealing — Part 3: Dimensions, design, test methods and requirements for light-duty (L series) stud ends*

ISO 9227, *Corrosion tests in artificial atmospheres — Salt spray tests*

ISO 9974-1, *Connections for general use and fluid power — Ports and stud ends with ISO 261 threads with elastomeric or metal-to-metal sealing — Part 1: Threaded ports*

ISO 9974-2, *Connections for general use and fluid power — Ports and stud ends with ISO 261 threads with elastomeric or metal-to-metal sealing — Part 2: Stud ends with elastomeric sealing (type E)*

ISO 9974-3, *Connections for general use and fluid power — Ports and stud ends with ISO 261 threads with elastomeric or metal-to-metal sealing — Part 3: Stud ends with metal-to-metal sealing (type B)*

ISO 19879, *Metallic tube connections for fluid power and general use — Test methods for hydraulic fluid power connections*

3 Terms and definitions

For the purposes of this document, the terms and definitions given in ISO 5598 and the following apply.

ISO and IEC maintain terminological databases for use in standardization at the following addresses:

— IEC Electropedia: available at http://www.electropedia.org/

— ISO Online browsing platform: available at http://www.iso.org/obp

3.1
connector
device that connects tubes, hoses or pipes to each other or to components

[SOURCE: ISO 5598:2008, 3.2.122]

3.2
connection
assembly of parts belonging to piping

3.3
fastening thread
terminal thread of a complete connector

3.4
run
two principal, axially aligned outlets of a tee connector or cross connector

[SOURCE: ISO 5598:2008, 3.2.632]

3.5
branch
side outlet(s) of a tee connector or cross connector

[SOURCE: ISO 5598:2008, 3.2.81]

3.6
chamfer
removal of a conical portion at the entrance of a thread, used to assist assembly and prevent damage to the start of the thread

3.7
face-to-face dimension
distance between the two parallel faces of axially aligned outlets of a connector

3.8
face-to-centre dimension
distance from the face of an outlet to the central axis of an angularly disposed outlet

3.9
assembly torque
torque required to achieve a satisfactory final connection

[SOURCE: ISO 5598:2008, 3.2.46]

3.10
maximum working pressure
highest pressure at which a system or sub-system is intended to operate in steady-state operating conditions

Note 1 to entry: For components and piping see also related term “rated pressure”.

[SOURCE: ISO 5598:2008, 3.2.429, modified — NOTE 2 deleted.]

4 Materials

4.1 General

Figures 1 and 2 show the cross-sections and component parts of typical 24° cone connectors.

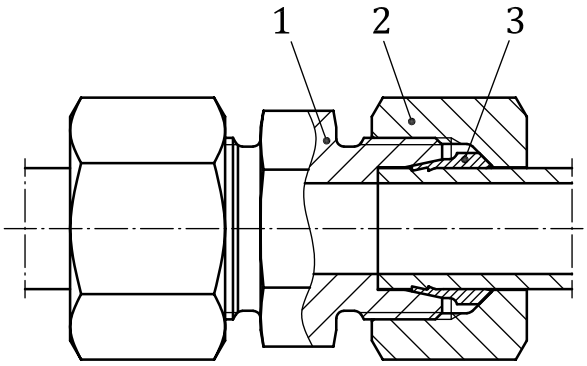

Key

1 body

2 nut

3 cutting ring

Figure 1 — Cross-section of typical 24° cone connector with cutting ring

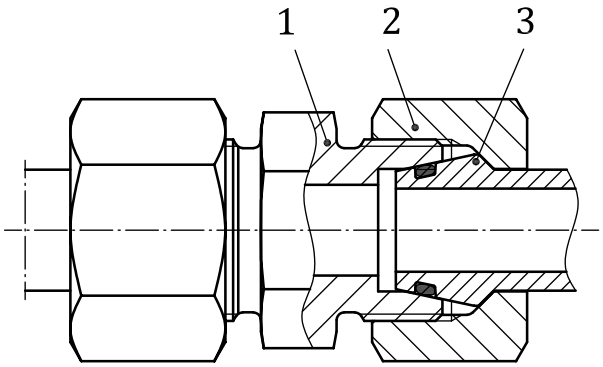

Key

1 body

2 nut

3 DKO-end (including O-ring)

Figure 2 — Cross-section of typical 24° cone connector with O-ring seal cone (DKO) end

4.2 Connector bodies

Bodies shall be manufactured from carbon steel that will provide the minimum pressure/temperature requirements specified in Clause 5. They shall have characteristics that make them suitable for use with the fluid to be conveyed and that will provide an effective joint. Weld connector types and weld-on nipples shall be made of materials classified as suitable for welding.

For bodies manufactured from stainless steel and copper alloys, the pressure/temperature ratings need to be defined by the manufacturer.

4.3 Nuts

Nuts to be used with carbon steel bodies shall be made of carbon steel, and those for use with stainless steel bodies shall be made of stainless steel, unless otherwise specified. Nuts to be used with copper alloy bodies shall be made of a material similar to the bodies.

4.4 Cutting rings

4.4.1 The ring material shall be compatible with the fluid to be conveyed and provide an effective joint.

4.4.2 Steel cutting rings are to be used in combination with other steel connector components and steel tubes.

4.4.3 Stainless steel cutting rings are to be used in combination with other stainless steel connector components and stainless steel tubes.

4.4.4 Brass cutting rings are to be used in combination with other brass connector components and copper tubes.

4.4.5 Other combinations of materials shall be agreed upon between the purchaser and supplier.

4.5 O-rings

Unless otherwise specified, for use with petroleum-based hydraulic fluids at the pressure and temperature requirements given in Clause 5 and Table 1, O-rings for use with connectors in accordance with this document shall be made of acrylonitrile-butadiene rubber (NBR) with a hardness of (90 ± 5) IRHD, measured in accordance with ISO 48, and shall conform to the dimensions given in Table 7 and shall meet or exceed the O-ring quality acceptance criteria of ISO 3601-3, grade N. In those cases where the pressure and temperature requirements of this document and/or the hydraulic fluid used in the system differ from those specified in Clause 5 and Table 1, the connector manufacturer shall be consulted to ensure that an appropriate O-ring material is selected.

5 Pressure/temperature requirements

5.1 Connectors in conformance with this document made of carbon steel shall meet or exceed without leakage the requirements from a vacuum of 6,5 kPa (0,065 bar) absolute pressure to the working pressures given in Tables 1 to 3 when used at temperatures between −40 °C and +120 °C with petroleum-base hydraulic fluids.

5.2 Connectors conforming to this document can contain elastomeric seals. Unless otherwise specified, connectors are made and delivered with elastomeric seals for use within the specified working temperature range with petroleum-base hydraulic fluids. The use of these connectors and elastomeric seals with other hydraulic fluids may result in a reduced working temperature range or may render the connectors unsuitable for the application. Manufacturers may supply, upon request, connectors with elastomeric seals for use with hydraulic fluids other than petroleum-base hydraulic fluids which will meet the specified working temperature range of the connectors.

5.3 The connector assembly shall meet or exceed all applicable performance requirements given in Clause 15. Testing shall be conducted at room temperature.

5.4 For applications under conditions other than the pressure and/or temperature limits given in Tables 1 to 3 and in 5.1 and 5.3, the manufacturer shall be consulted.

5.5 According to different applications and different pressure ratings, there are three series of connector, designated by

— LL, for extra light-duty,

— L, for light-duty, and

— S, for heavy-duty.

NOTE Ranges of the tube outside diameters and pressure requirements are shown in Tables 1 to 3.

Table 1 — Working pressures for 24° cone connectors for fluid power and general use

Series	Tube outside diameter (OD)	Cone and cutting ring connection			ISO 6149-2 or ISO 6149-3 stud end		
		Thread	Maximum working pressure[a]		Thread	Maximum working pressure[a]	
	mm		MPa	(bar[b])		MPa	(bar[b])
LL	4	M8 × 1	10	(100)	—	—	—
	5	M10 × 1	10	(100)	—	—	—
	6	M10 × 1	10	(100)	—	—	—
	8	M12 × 1	10	(100)	—	—	—
L	6	M12 × 1,5	25	(250)	M10 × 1	25	(250)
	8	M14 × 1,5	25	(250)	M12 × 1,5	25	(250)
	10	M16 × 1,5	25	(250)	M14 × 1,5	25	(250)
	12	M18 × 1,5	25	(250)	M16 × 1,5	25	(250)
	15	M22 × 1,5	25	(250)	M18 × 1,5	25	(250)
	18	M26 × 1,5	16	(160)	M22 × 1,5	16	(160)
	22	M30 × 2	16	(160)	M27 × 2	16	(160)
	28	M36 × 2	10	(100)	M33 × 2	10	(100)
	35	M45 × 2	10	(100)	M42 × 2	10	(100)
	42	M52 × 2	10	(100)	M48 × 2	10	(100)
S	6	M14 × 1,5	63	(630)	M12 × 1,5	63	(630)
	8	M16 × 1,5	63	(630)	M14 × 1,5	63	(630)
	10	M18 × 1,5	63	(630)	M16 × 1,5	63	(630)
	12	M20 × 1,5	63	(630)	M18 × 1,5	63	(630)
	16	M24 × 1,5	40	(400)	M22 × 1,5	40	(400)
	20	M30 × 2	40	(400)	M27 × 2	40	(400)
	25	M36 × 2	40	(400)	M33 × 2	40	(400)
	30	M42 × 2	25	(250)	M42 × 2	25	(250)
	38	M52 × 2	25	(250)	M48 × 2	25	(250)

For higher pressure ratings and for dynamic conditions, the manufacturer shall be consulted.

[a] With a design factor of 4 to 1.

[b] 1 bar = 10^5 N/m^2 = 10^5 Pa = 0,1 MPa.

Table 2 — Working pressures for 24° cone connectors, for general use only

Series	Tube OD	Cone and cutting ring connection			ISO 9974 stud end					ISO 1179 stud end				
		Thread	Maximum working pressure[a]		Thread	Maximum working pressure[a]				Thread	Maximum working pressure[a]			
						ISO 9974-2 (type E)[b]		ISO 9974-3 (type B)[c]			ISO 1179-2 (type E)[b]		ISO 1179-4 (type B)[c]	
	mm		MPa	(bar)		MPa	(bar)	MPa	(bar)		MPa	(bar)	MPa	(bar)
LL	4	M8 × 1	10	(100)	M8 × 1	—	—	10	(100)	G 1/8 A	—	—	10	(100)
	5	M10 × 1	10	(100)	M8 × 1	—	—	10	(100)	—	—	—	—	—
	6	M10 × 1	10	(100)	M10 × 1	—	—	10	(100)	—	—	—	—	—
	8	M12 × 1	10	(100)	M10 × 1	—	—	10	(100)	—	—	—	—	—
L	6	M12 × 1,5	25	(250)	M10 × 1	25	(250)	25	(250)	G 1/8 A	25	(250)	25	(250)
	8	M14 × 1,5	25	(250)	M12 × 1,5	25	(250)	25	(250)	G 1/4 A	25	(250)	25	(250)
	10	M16 × 1,5	25	(250)	M14 × 1,5	25	(250)	25	(250)	G 1/4 A	25	(250)	25	(250)
	12	M18 × 1,5	25	(250)	M16 × 1,5	25	(250)	25	(250)	G 3/8 A	25	(250)	25	(250)
	15	M22 × 1,5	25	(250)	M18 × 1,5	25	(250)	25	(250)	G 1/2 A	25	(250)	25	(250)
	18	M26 × 1,5	16	(160)	M22 × 1,5	16	(160)	16	(160)	G 1/2 A	16	(160)	16	(160)
	22	M30 × 2	16	(160)	M26 × 1,5	16	(160)	16	(160)	G 3/4 A	16	(160)	16	(160)
	28	M36 × 2	10	(100)	M33 × 2	10	(100)	10	(100)	G 1 A	10	(100)	10	(100)
	35	M45 × 2	10	(100)	M42 × 2	10	(100)	10	(100)	G 1 1/4 A	10	(100)	10	(100)
	42	M52 × 2	10	(100)	M48 × 2	10	(100)	10	(100)	G 1 1/2 A	10	(100)	10	(100)
S	6	M14 × 1,5	63	(630)	M12 × 1,5	63	(630)	40	(400)	G 1/4 A	63	(630)	40	(400)
	8	M16 × 1,5	63	(630)	M14 × 1,5	63	(630)	40	(400)	G 1/4 A	63	(630)	40	(400)
	10	M18 × 1,5	63	(630)	M16 × 1,5	63	(630)	40	(400)	G 3/8 A	63	(630)	40	(400)
	12	M20 × 1,5	63	(630)	M18 × 1,5	63	(630)	40	(400)	G 3/8 A	63	(630)	40	(400)
	16	M24 × 1,5	40	(400)	M22 × 1,5	40	(400)	40	(400)	G 1/2 A	40	(400)	40	(400)
	20	M30 × 2	40	(400)	M27 × 2	40	(400)	40	(400)	G 3/4 A	40	(400)	40	(400)

For higher pressure ratings and for dynamic conditions, the manufacturer shall be consulted.

[a] With a design factor of 4 to 1.

[b] Type E with elastomeric sealing.

[c] Type B with metal-to-metal sealing.

Table 2 *(continued)*

Series	Tube OD	Cone and cutting ring connection			ISO 9974 stud end					ISO 1179 stud end				
		Thread	Maximum working pressure[a]		Thread	Maximum working pressure[a]				Thread	Maximum working pressure[a]			
						ISO 9974-2 (type E)[b]		ISO 9974-3 (type B)[c]			ISO 1179-2 (type E)[b]		ISO 1179-4 (type B)[c]	
	mm		MPa	(bar)		MPa	(bar)	MPa	(bar)		MPa	(bar)	MPa	(bar)
	25	M36 × 2	40	(400)	M33 × 2	40	(400)	25	(250)	G 1 A	40	(400)	25	(250)
	30	M42 × 2	25	(250)	M42 × 2	25	(250)	16	(160)	G 1 1/4 A	25	(250)	16	(160)
	38	M52 × 2	25	(250)	M48 × 2	25	(250)	16	(160)	G 1 1/2 A	25	(250)	16	(160)

For higher pressure ratings and for dynamic conditions, the manufacturer shall be consulted.

a With a design factor of 4 to 1.

b Type E with elastomeric sealing.

c Type B with metal-to-metal sealing.

Table 3 — Working pressures for 24° cone weld-on nipples with various tube wall thicknesses

Dimensions in millimetres

Series	Tube OD	Maximum working pressure											
		10 MPa (100 bar)		16 MPa (160 bar)		25 MPa (250 bar)		31,5 MPa (315 bar)		40 MPa (400 bar)		63 MPa (630 bar)	
		Tube ID	*T*	Tube ID	*T*	Tube ID	*T*	Tube ID	*T*	Tube ID	*T*	Tube ID	*T*
L	6	3	1,5	3	1,5	3	1,5						
	8	5	1,5	5	1,5	5	1,5						
	10	7	1,5	7	1,5	7	1,5						
	12	8	2	8	2	8	2						
	15	10	2,5	10	2,5	10	2,5						
	18	13	2,5	13	2,5								
	22	17	2,5	17	2,5								
	28	23	2,5										
	35	29	3										
	42	36	3										
S	6	2,5	1,75	2,5	1,75	2,5	1,75	2,5	1,75	2,5	1,75	2,5	1,75
	8	4	2	4	2	4	2	4	2	4	2	4	2
	10	6	2	6	2	6	2	6	2	6	2	5	2,5
	12	8	2	8	2	8	2	8	2	7	2,5	6	3
	16	11	2,5	11	2,5	11	2,5	11	2,5	10	3		
	20	14	3	14	3	14	3	14	3	12	4		
	25	19	3	19	3	19	3	17	4	16	4,5		
	30	24	3	24	3	22	4						
	38	32	3	32	3	28	5						

For pressure and/or temperature applications outside those given in this document, the manufacturer shall be consulted.

ID interior diameter

T tube wall thickness

6 Designation of connectors

6.1 Connectors shall be designated by an alphanumeric code to facilitate ordering. They shall be designated by the word "Connector" followed by ISO 8434-1, followed by a spaced hyphen, then the connector style letter symbols (see 6.2), followed by a spaced hyphen, then the series letter(s) (see 5.5), immediately followed by the outside diameter of the tube with which they are to be connected. For weld nipples, a multiplication sign (×) shall then follow, then the tube wall thickness. There shall be no spaces on either side of the multiplication symbol. For stud ends (connector ends), a multiplication symbol followed by the thread designation of the stud end, followed by a spaced hyphen and the sealing type shall be added.

6.2 The letter symbol designation of the connector style shall have three parts: the connection end type, immediately followed by the shape of the connector and by the indication that a complete connector is ordered.

6.3 Tube ends are assumed and thus do not need to be included in the code. However, if another type of end is involved, it shall be designated.

6.4 Reducing connectors and reducing elbows shall be designated by specifying the larger tube end first.

6.5 Stud connectors (see Figures 3 and 4) shall be designated by specifying the tube end first, then the thread size for the stud end with the sealing type letter.

6.6 For tee connectors, the order of designation of the connection ends shall start with the larger end on the run followed by the tee.

6.7 For cross connectors, the order of designation of the connection ends shall be from left to right, followed by top to bottom, with the larger ends on the left and at the top.

6.8 If the connector has a swivel, it shall be designated first. On run tees the branch end shall follow.

6.9 The following letter symbols shall be used.

Connection end type	**Symbol**
Bulkhead	BH
Swivel with O-ring	SWO
Weld-on/weld-in	WD
Stud	SD
Reducer	RD

Shape	**Symbol**
Straight	S
Elbow	E
45° elbow	E45
Tee	T
Run tee	RT
Branch tee	BT
Cross	K

Component type	**Symbol**
Nut	N
Cutting ring	CR
Locknut	LN
Nipple	NP
Plug	PL

Completeness indication	Symbol
Complete connector	C

Stud end sealing types	Symbol
Metal-to-metal sealing	B
Elastomeric sealing	E
O-ring sealing	F

6.10 Examples of compression connectors and designations are given below and in Figures 3 to 6.

EXAMPLE 1 A stud straight connector, including O-ring without cutting ring and nut, with a heavy-duty stud connection end having an M18 × 1,5 thread in accordance with ISO 6149-2, to be connected to a 12 mm OD tube, is designated for ordering as follows:

Connector ISO 8434-1 - SDS - S12×M18 - F

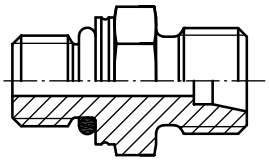

Figure 3 — Stud straight connector (SDS) with stud end as per ISO 6149-2 (sealing type F)

EXAMPLE 2 A complete stud straight connector, including O-ring with cutting ring and nut, with a heavy-duty stud connection end having an M18 × 1,5 thread in accordance with ISO 6149-2, to be connected to a 12 mm OD tube, is designated for ordering as follows:

Connector ISO 8434-1 - SDSC - S12×M18 - F

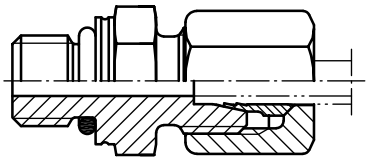

Figure 4 — Complete stud straight connector (SDSC) with stud end as per ISO 6149-2 (sealing type F)

EXAMPLE 3 A complete weld-on nipple, including O-ring, with a light-duty connection end, to be welded to a 15 mm OD tube having a wall thickness of 1,5 mm, is designated for ordering as follows:

Connector ISO 8434-1 - WDNP - L15×1,5

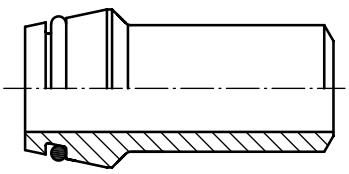

Figure 5 — Weld-on nipple with O-ring (WDNP)

EXAMPLE 4 A branch tee reducer connector with a swivel with O-Ring union connector (DKO) to be connected to an 18 mm OD tube end on the branch and to be connected with 15 mm OD tubes on the run, is designated for ordering as follows:

Connector ISO 8434-1 - SWOBT - L18 - L15 - L15

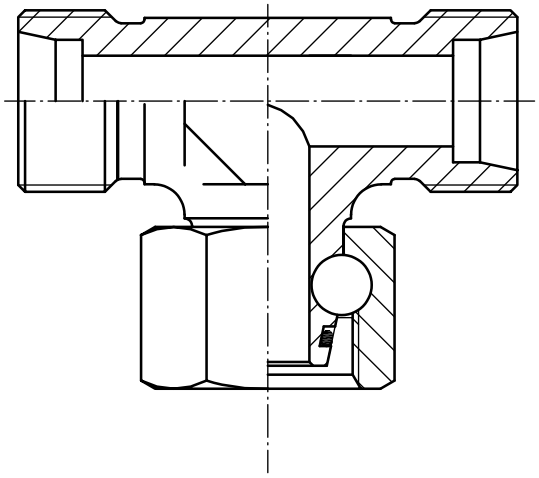

Figure 6 — Branch tee (SWOBT) reducer with O-Ring

7 Requirements for tubes

Carbon steel tubes shall comply with delivery condition R37 NBK, as specified in ISO 3304 (cold-drawn and normalized) or ISO 3305 (cold-drawn and normalized). Stainless steel tubes shall be in accordance with ISO 1127 (annealed).

8 Across-flats dimensions and tolerances

8.1 For sizes up to and including 24 mm, tolerances for across-flats dimensions for forgings shall be $^{0}_{-0,8}$ mm, and for sizes larger than 24 mm, they shall be $^{0}_{-1}$ mm.

8.2 Hex tolerances across flats shall be in accordance with ISO 4759-1, product grade C. Minimum across-corner hex dimensions are 1,092 times the width across flats. The minimum side flat is 0,43 times the nominal width across flats. Unless otherwise specified or shown, hex corners shall be chamfered 10° to 15° to a diameter equal to the width across flats, with a tolerance of $^{0}_{-0,4}$ mm. The dimensions across flats for nuts and on the bodies of the connectors shall be those given in Table 5 and Tables 9 to 21.

9 Design

9.1 Connectors

The connectors shall conform to the requirements given in Figures 7 to 26 and Tables 4 to 22. They shall be designed so that resistance to flow is reduced to a minimum.

9.2 Dimensions

Dimensions specified apply to finished parts, including any plating or other treatments. The tolerance value for all dimensions not otherwise limited shall be ±0,4 mm. The sealing seats of connectors shall be concentric with straight thread pitch diameters within 0,25 mm full indicator reading (FIR).

9.3 Passage tolerances

Where passages in straight connectors are machined from opposite ends, the offset at the meeting point shall not exceed 0,4 mm. No cross-sectional area at a junction of passages shall be less than that of the smallest specified passage.

9.4 Angular tolerances

Angular tolerance on axes of ends of elbows, tees and crosses shall be ±2,5° for connectors for tube sizes 10 mm and smaller, and ±1,5° for all larger sizes.

9.5 Contour details

Details of contour shall be chosen by the manufacturer provided the dimensions given in Tables 4 to 22 are maintained. Wrench flats on elbows and tees shall conform to the dimensions given in the relevant tables. Abrupt reduction of a section shall be avoided. Junctions of small external sections and adjoining sections that are relatively heavy shall be blended by means of ample fillets.

9.6 Ports and stud ends

These connectors shall be used for the connection of plain end tubes and hose connectors to ports in accordance with ISO 6149-1, ISO 1179-1 or ISO 9974-1. For new designs in hydraulic fluid power applications, only ports and stud ends in accordance with the relevant parts of ISO 6149 shall be used.

9.7 Stud end sealing

Unless otherwise agreed upon between the supplier and purchaser, seals for stud ends and weld nipples shall be included in the delivery.

10 Screw threads

10.1 Cone ends and nuts

The screw threads on the cone ends and the nuts of the connectors shall be ISO metric screw threads in accordance with ISO 724, tolerance grade 6g and 6H respectively, in accordance with ISO 965-1.

Threads shall be chamfered at the face of the connector to an included angle of 45°. The diameter of the chamfer shall be equal to the minor diameter of the thread, with a tolerance of $^{0}_{-0,4}$ mm.

10.2 Stud ends (connection ends)

The thread for stud ends (connection ends) of connectors shall be chosen from ISO 228-1, Class A, or ISO 724, tolerance grade 6g, in accordance with ISO 965-1. The dimensions of the stud ends shall be in accordance with Tables 11 to 13, 18 and 19 and the relevant stud end standards.

11 Manufacture

11.1 Construction

Carbon steel connectors made from multiple components shall be bonded together with materials having a melting point of not less than 1 000 °C.

11.2 Workmanship

The connectors shall be free from defects such as cracks and porosity and shall be deburred. Sharp edges shall be removed on the outside. All machined surfaces shall have a material removal rate surface roughness value of MRR Ra ≤ 6,3, except where otherwise specified in the figures.

11.3 Finish

The external surface and threads of all carbon steel parts shall be plated or coated with a suitable material that passes a 72 h neutral salt spray test in accordance with ISO 9227, unless otherwise agreed upon by the manufacturer and the user. Any appearance of red rust during the salt spray test on any area, excepting the following, shall be considered failure:

— all internal fluid passages;

— edges, such as hex points, serrations and crests of threads, where there may be mechanical deformation of the plating or coating typical of mass-produced parts or shipping effects;

— areas where there is mechanical deformation of the plating or coating caused by crimping, flaring, bending and other post-plate metal-forming operations;

— areas where the parts are suspended or affixed in the test chamber, where condensate can accumulate.

Internal fluid passages shall be protected from corrosion during storage. Weld components shall be protected from corrosion by an oil film or phosphate coating, or by other means that do not negatively affect weldability.

Cadmium plating is not allowed because of environmental concerns. Parts manufactured in accordance with this document shall not be cadmium-plated. Hexavalent chromate coatings are not preferred because of environmental concerns. Changes in plating can affect assembly torques and require requalification, when applicable.

11.4 Corners

Unless otherwise noted, all sharp corners shall be broken to 0,15 mm maximum.

12 Assembly instruction

The assembly of the connectors with the connecting tubes shall be carried out without external loads.

The manufacturer shall draw up assembly instructions for the use of the connectors. These instructions shall include at least the following:

— details relating to material and quality of suitable tubes;

— details concerning the preparation of the selected tube;

— instructions regarding the assembly of the connector, such as the number of wrenching turns or assembly torque;

— recommendations regarding the tools to be used for assembly.

NOTE Assembly instructions for cutting ring connectors are presented in Annex A.

13 Procurement information

The following information should be supplied by the purchaser when making an inquiry or placing an order:

— description of connector;

— material of connector;

— material and size of tube;

— fluid to be conveyed;

— working pressure;

— fluid working temperature range;

— ambient temperature range.

14 Marking of components

Connector bodies, cutting rings, weld-on nipples and nuts shall be permanently marked with the manufacturer's name, trademark or code identifier unless otherwise agreed by the user and manufacturer. Nuts shall also be marked with the connector size and series.

15 Performance and qualification test

15.1 General

The connectors shall meet or exceed the pressure requirements given in Table 1 when tested in accordance with this clause.

15.2 Repeated assembly test

The connectors shall pass a repeated assembly test in accordance with ISO 19879.

15.3 Proof test

The connectors shall pass a proof test in accordance with ISO 19879.

15.4 Burst pressure test

The connectors shall pass a burst pressure test in accordance with ISO 19879.

15.5 Cyclic endurance (impulse) test

The connectors shall pass a cyclic endurance test in accordance with ISO 19879. The cyclic endurance test with vibration specified in ISO 19879 may be used in place of separate cyclic endurance and vibration tests.

15.6 Vibration test

The connectors shall pass a vibration test in accordance with ISO 19879. The cyclic endurance test with vibration specified in ISO 19879 may be used in place of separate cyclic endurance and vibration tests.

15.7 Leakage (gas) test

The connectors shall pass a leakage (gas) test in accordance with ISO 19879.

15.8 Overtightening test

15.8.1 Connectors with cutting rings

15.8.1.1 For each size, three samples each of the cutting ring connection ends shall be tested.

15.8.1.2 Tighten the cutting ring connection end to finger-tight position plus the number of turns recommended by the manufacturer, and record the resulting torque. Apply an overload of 30 % of the recorded torque, not to exceed 100 Nm. The connection shall be capable of withstanding this overload with no indication of the following failures:

— the nut cannot be removed and swivels freely after breakaway;

— visible cracks or severe deformation appear that would render the connector component unusable.

15.8.2 Connectors with O-ring seal cone (DKO)

15.8.2.1 For each size, three samples of the O-ring seal cone (DKO) ends shall be tested.

15.8.2.2 Apply the manufacturer's recommended torque plus an overload of 30 % of the recommended torque, not to exceed 100 Nm. The connection shall be capable of withstanding this overload with no indication of the following failures:

— the nut cannot be removed and swivels freely after breakaway;

— visible cracks or severe deformation appear that would render the connector component unusable.

15.9 Vacuum test

The connectors shall pass a vacuum test in accordance with ISO 19879.

16 Identification statement (reference to this document)

Use the following statement in test reports, catalogues and sales literature when electing to comply with this document:

"Dimensions and design for 24° cone connectors in accordance with ISO 8434-1, *Metallic tube connections for fluid power and general use — Part 1: 24° cone connectors*."

Surface roughness values in micrometres.

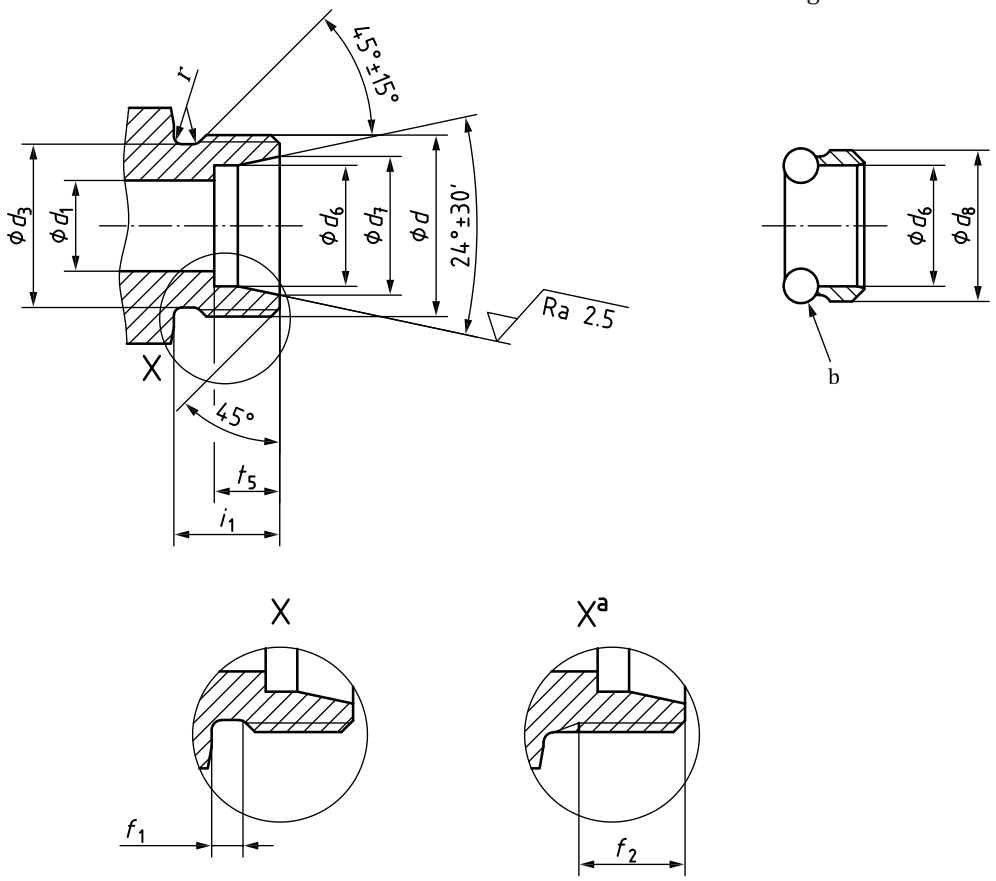

Key

a Optional thread run-out.

b Interface at the option of the manufacturer.

NOTE For dimension values, see Table 4.

Figure 7 — Cutting ring (CR) and 24° cone end

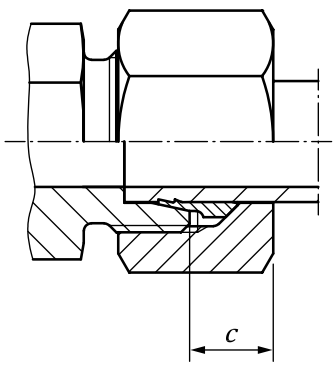

NOTE For dimension values, see Table 4.

Figure 8 — Assembly

Table 4 — Dimensions of cone end and cutting ring

Dimensions in millimetres

Series	Tube OD	Thread d	i_1 ±0,2	t_5 $^{+0,3}_{0}$	d_1 nom.	d_1 tol.	d_6 B11[b]	d_6 $^{+0,1}_{0}$	d_7 $^{+0,1}_{0}$	d_8 max.	d_3 $^{0}_{-0,2}$	f_1 $^{+0,3}_{0}$	f_2 min.	r ±0,2	c[a] ≈
LL	4	M8 × 1	8	4	3	±0,1	4	—	5	6,5	6,4	2	6	0,8	6
	5	M10 × 1	8	5,5	3,5	±0,1	5	—	6,5	8,5	8,4	2	6	0,8	6
	6	M10 × 1	8	5,5	4,5	±0,1	6	—	7,5	8,5	8,4	2	6	0,8	6
	8	M12 × 1	9	5,5	6	±0,1	8	—	9,5	10,5	10,4	2	8	0,8	6
L	6	M12 × 1,5	10	7	4	±0,1	6	—	8,1	10	9,7	3	7,5	1	8
	8	M14 × 1,5	10	7	6	±0,1	8	—	10,1	12	11,7	3	7,5	1	8
	10	M16 × 1,5	11	7	8	±0,2	10	—	12,3	14	13,7	3	8,5	1	8
	12	M18 × 1,5	11	7	10	±0,2	12	—	14,3	16	15,7	3	8,5	1	8
	15	M22 × 1,5	12	7	12	±0,2	15	—	17,3	20	19,7	3	9,5	1	8
	18	M26 × 1,5	12	7,5	15	±0,2	18	—	20,3	24	23,7	3	9,5	1	9
	22	M30 × 2	14	7,5	19	±0,2	22	—	24,3	27	27	4	10,5	1,2	9
	28	M36 × 2	14	7,5	24	±0,2	28	—	30,3	33	33	4	10,5	1,2	9
	35	M45 × 2	16	10,5	30	±0,3	—	35,3	38	42	42	4	12,5	1,2	11
	42	M52 × 2	16	11	36	±0,3	—	42,3	45	49	49	4	12,5	1,2	12
S	6	M14 × 1,5	12	7	4	±0,1	6	—	8,1	12	11,7	3	9,5	1	8
	8	M16 × 1,5	12	7	5	±0,2	8	—	10,1	14	13,7	3	9,5	1	8
	10	M18 × 1,5	12	7,5	7	±0,2	10	—	12,3	16	15,7	3	9,5	1	9
	12	M20 × 1,5	12	7,5	8	±0,2	12	—	14,3	18	17,7	3	9,5	1	9
	16	M24 × 1,5	14	8,5	12	±0,2	16	—	18,3	22	21,7	3	11,5	1	10
	20	M30 × 2	16	10,5	16	±0,2	20	—	22,9	27	27	4	12,5	1,2	11
	25	M36 × 2	18	12	20	±0,2	25	—	27,9	33	33	4	14,5	1,2	12
	30	M42 × 2	20	13,5	25	±0,2	30	—	33	39	39	4	16,5	1,2	13
	38	M52 × 2	22	16	32	±0,3	—	38,3	41	49	49	4	18,5	1,2	15

[a] Dimension is measured when fully tightened.

[b] Tolerances in accordance with ISO 286-2.

Dimensions in millimetres
Surface roughness values in micrometres

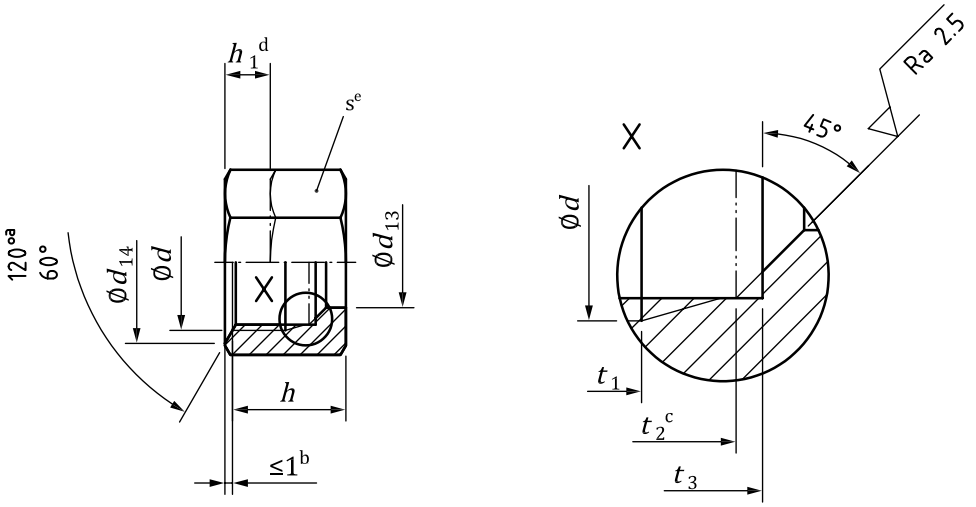

Key

a Internal chamfer angle.

b Permitted for cold-formed nuts.

c Alternative full chamfer.

d For optional machining of shoulders

e Width across flats.

Figure 9 — Tube nut (N)

Table 5 — Dimensions of tube nut

Dimensions in millimetres

Series	Tube OD	Thread d	d_{13} B11[b]	d_{13} $^{+0,1}_{0}$	d_{14}[a] ref.	t_1 min.	h $^{+0,5}_{-0,2}$	h_1[a] ±1	s	t_2 $^{0}_{+0,2}$	t_3 $^{0}_{+0,2}$
LL	4	M8 × 1	4	—	9,8	5	11	3,5	10	7,5	8
	5	M10 × 1	5	—	11,8	5,5	11,5	3,5	12	7,8	8,5
	6	M10 × 1	6	—	11,8	5,5	11,5	3,5	12	8,2	8,5
	8	M12 × 1	8	—	13,8	6	12	3,5	14	8,7	9
L	6	M12 × 1,5	6	—	13,8	7	14,5	4	14	10	10,5
	8	M14 × 1,5	8	—	16,8	7	14,5	4	17	10	10,5
	10	M16 × 1,5	10	—	18,8	8	15,5	4	19	11	11,5
	12	M18 × 1,5	12	—	21,8	8	15,5	5	22	11	11,5
	15	M22 × 1,5	15	—	26,8	8,5	17	5	27	11,5	12,5
	18	M26 × 1,5	18	—	31,8	8,5	18	5	32	11,5	13
	22	M30 × 2	22	—	35,8	9,5	20	7	36	13,5	14,5
	28	M36 × 2	28	—	40,8	10	21	7	41	14	15
	35	M45 × 2	—	35,3	49,8	12	24	8	50	16	17
	42	M52 × 2	—	42,3	59,6	12	24	8	60	16	17
S	6	M14 × 1,5	6	—	16,8	8,5	16,5	5	17	11	12,5
	8	M16 × 1,5	8	—	18,8	8,5	16,5	5	19	11	12,5
	10	M18 × 1,5	10	—	21,8	8,5	17,5	5	22	11	12,5
	12	M20 × 1,5	12	—	23,8	8,5	17,5	5	24	11	12,5
	16	M24 × 1,5	16	—	29,8	10,5	20,5	6	30	13	14,5
	20	M30 × 2	20	—	35,8	12	24	8	36	15,5	17
	25	M36 × 2	25	—	45,8	14	27	9	46	17	19
	30	M42 × 2	30	—	49,8	15	29	10	50	18	20
	38	M52 × 2	—	38,3	59,6	17	32,5	10	60	19,5	22,5

[a] Dimensions d_{14} and h_1 are for optional machining of shoulders.

[b] Tolerances in accordance with ISO 286-2.

Dimensions in millimetres
Surface roughness values in micrometres

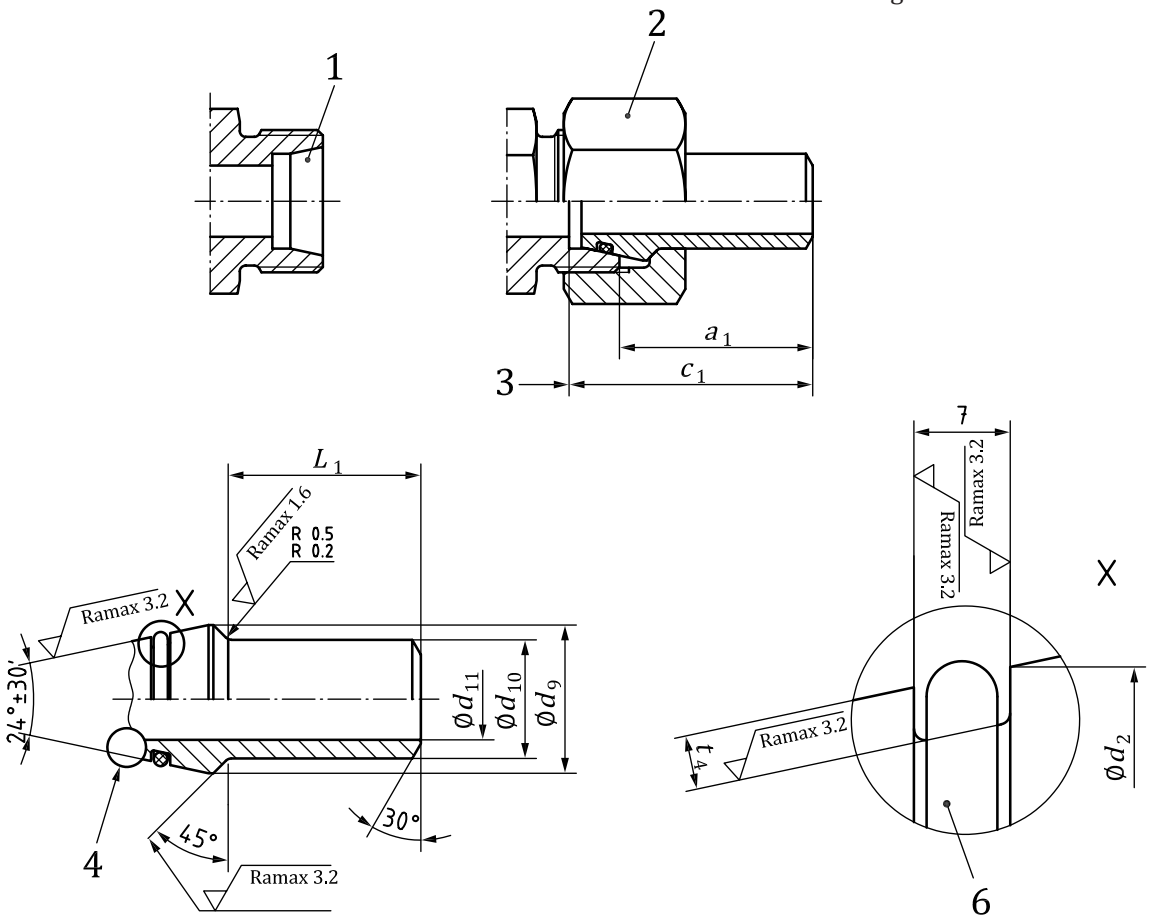

Type A

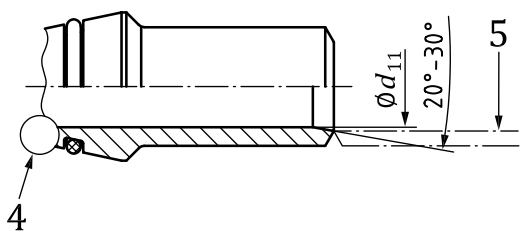

Type B

Key

1 24° cone end (see Figure 7)
2 tube nut (see Figure 9)
3 tube stop
4 interface, as chosen by the manufacturer
5 tube inside diameter
6 O-ring
7 width of O-ring groove, as chosen by the manufacturer

Figure 10 — Weld-on nipple (WDNP)

Table 6 — Dimensions of weld-on nipple

Dimensions in millimetres

Series	Tube OD	d_{10}	d_{11}[a]		d_9		d_2	L_1	c_1	a_1	t_4
		±0,1	nom.	tol.	min.	max.	max.	±0,2	±1	±1	±0,1
L	6	6	3	±0,1	9	11	7,8	19	32	25	1,1
	8	8	5	±0,2	11	13	9,8	19	32	25	1,1
	10	10	7	±0,2	14	16	12	20	33,5	26	1,1
	12	12	8	±0,2	16	18	14	20	33,5	26	1,1
	15	15	10	±0,2	18	20	17	22	35	28	1,5
	18	18	13	±0,2	21	24	20	23	37	29,5	1,5
	22	22	17	±0,2	25	27	24	24,5	39,5	32	1,5
	28	28	23	±0,2	31	33	30	27,5	42,5	35	1,5
	35	35	29	±0,3	40	42	37,7	30,5	49,5	39	1,9
	42	42	36	±0,3	47	49	44,7	30,5	50	39	1,9
S	6	6	2,5	±0,1	9	11	7,8	19	32	25	1,1
	8	8	4	±0,2	11	13	9,8	19	32	25	1,1
	10	10	6	±0,1	14	16	12	20	33,5	26	1,1
	12	12	8	±0,2	16	18	14	20	33,5	26	1,1
	16	16	11	±0,2	20	22	18	26	40,5	32	1,5
	20	20	14	±0,2	24	27	22,6	28,5	47	36,5	1,8
	25	25	19	±0,2	29	33	27,6	33,5	53,5	41,5	1,8
	30	30	24	±0,2	35	39	32,7	35,5	57,5	44	1,8
	38	38	32	±0,3	43	49	40,7	39,5	64,5	48,5	1,8

NOTE The dimensions given in this table are for the lowest working pressures given in Table 3. See Table 3 for tube inside diameters and wall thicknesses required for other working pressures.

[a] Maximum permissible inside diameter of type A weld-on nipples. If the inside diameter of a tube is larger than d_{11} + 0,5 mm, use of type B weld-on nipples is recommended.

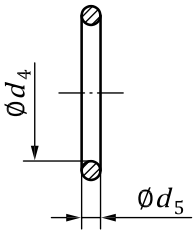

Figure 11 — O-ring

Table 7 — Dimensions of O-ring

Dimensions in millimetres

Series	Tube OD	Inside diameter d_4		Cross-section d_5	
		nom.	tol.	nom.	tol.
L	6	4,5	±0,14	1,5	±0,08
	8	6,5	±0,14	1,5	±0,08
	10	8	±0,16	1,5	±0,08
	12	10	±0,16	1,5	±0,08
	15	12	±0,18	2	±0,09
	18	15	±0,18	2	±0,09
	22	20	±0,22	2	±0,09
	28	26	±0,22	2	±0,09
	35	32	±0,31	2,5	±0,09
	42	38	±0,31	2,5	±0,09
S	6	4,5	±0,14	1,5	±0,08
	8	6,5	±0,14	1,5	±0,08
	10	8	±0,16	1,5	±0,08
	12	10	±0,16	1,5	±0,08
	16	13	±0,18	2	±0,09
	20	16,3	±0,18	2,4	±0,09
	25	20,3	±0,22	2,4	±0,09
	30	25,3	±0,22	2,4	±0,09
	38	33,3	±0,31	2,4	±0,09
All designs shall meet the performance requirements of this document using O-rings to these dimensions. O-rings of other sizes may be used as long as the sealing function is ensured.					

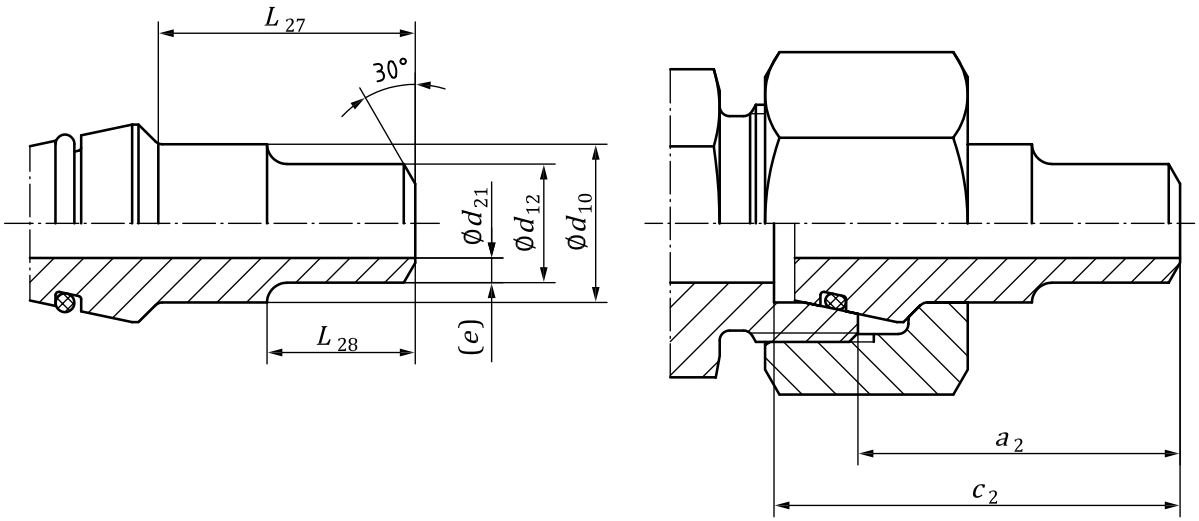

Figure 12 — Weld-on reducing nipple (WDRDNP)

Table 8 — Dimensions of L and S series weld-on reducing nipples

Dimensions in millimetres

Series	Tube OD d_{10} ±0,1	Tube OD d_{12} ±0,1	d_{21} nom.	d_{21} tol.	(e)	L_{27} ±0,2	c_2 ±1	a_2 ±1	L_{28} ±0,2
L	8	6	3	±0,1	1,5	19	31,5	24,5	12
	10	8	5	±0,1	1,5	20	33,5	26	12
	12	10	7	±0,2	1,5	20	33,5	26	14
	18	15	12	±0,2	1,5	23	37	29,5	16
	22	15	12	±0,2	1,5	24,5	39,5	32	18
		18	15	±0,2	1,5				
	28	15	12	±0,2	1,5	27,5	42,5	35	20
		18	15	±0,2	1,5				
		22	18	±0,2	2				
	35	15	12	±0,2	1,5	30,5	49,5	39	25
		18	15	±0,2	1,5				
		22	18	±0,2	2				
		28	24	±0,2	2				
	42	15	12	±0,2	1,5	30,5	50	39	28
		18	15	±0,2	1,5				
		22	18	±0,2	2				
		28	24	±0,2	2				
		35	31	±0,3	2				
	8	6	2	±0,1	2	19	32	25	12
	10	8	3	±0,1	2,5	20	33,5	26	12
		6	2	±0,1	2				
	12	10	4	±0,1	3	20	33,5	26	14
		8	3	±0,1	2,5				
		6	2	±0,1	2				

NOTE Working pressures correspond with 24° cone ends; see Table 1 or 2.

Table 8 *(continued)*

Series	Tube OD d_{10} ±0,1	Tube OD d_{12} ±0,1	d_{21} nom.	d_{21} tol.	(e)	L_{27} ±0,2	c_2 ±1	a_2 ±1	L_{28} ±0,2
S	16	12	8	±0,2	2	26	40,5	32	15
		10	6	±0,1	2				
		8	5	±0,1	1,5				
		6	3	±0,1	1,5				
	20	16	10	±0,2	3	28,5	47	36,5	17
		12	8	±0,2	2				
		10	6	±0,1	2				
		8	5	±0,1	1,5				
		6	3	±0,1	1,5				
	25	20	13	±0,2	3,5	33,5	53,5	41,5	20
		16	10	±0,2	3				
		12	8	±0,2	2				
		10	6	±0,1	2				
		8	5	±0,1	1,5				
		6	3	±0,1	1,5				
	30	25	20	±0,2	2,5	35,5	57,5	44	22
		20	16	±0,2	2				
		16	12	±0,2	2				
		12	9	±0,2	1,5				
		10	7	±0,2	1,5				
		8	5	±0,1	1,5				
		6	4	±0,1	1				
	38	30	24	±0,2	3	39,5	64,5	48,5	26
		25	20	±0,2	2,5				
		20	16	±0,2	2				
		16	12	±0,2	2				
		12	9	±0,2	1,5				
		10	7	±0,2	1,5				
		8	5	±0,1	1,5				
		6	4	±0,1	1				

NOTE Working pressures correspond with 24° cone ends; see Table 1 or 2.

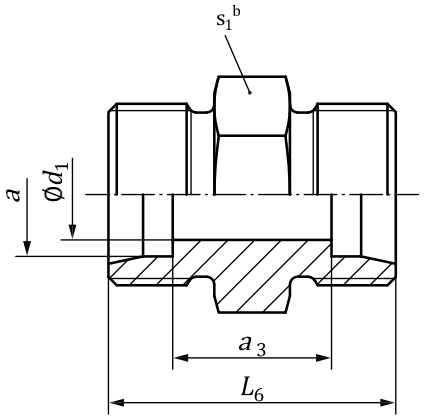

a Tube OD.

b Width across flats.

Figure 13 — Straight union connector (S)

Table 9 — Dimensions of straight union connectors

Dimensions in millimetres

Series	Tube OD	d_1		L_6	s_1	a_3
		nom.	tol.	±0,3		ref.
LL	4	3	±0,1	20	9	12
	5	3,5	±0,1	20	11	9
	6	4,5	±0,1	20	11	9
	8	6	±0,1	23	12	12
L	6	4	±0,1	24	12	10
	8	6	±0,1	25	14	11
	10	8	±0,2	27	17	13
	12	10	±0,2	28	19	14
	15	12	±0,2	30	24	16
	18	15	±0,2	31	27	16
	22	19	±0,2	35	32	20
	28	24	±0,2	36	41	21
	35	30	±0,3	41	46	20
	42	36	±0,3	43	55	21
S	6	4	±0,1	30	14	16
	8	5	±0,2	32	17	18
	10	7	±0,2	32	19	17
	12	8	±0,2	34	22	19
	16	12	±0,2	38	27	21
	20	16	±0,2	44	32	23
	25	20	±0,2	50	41	26
	30	25	±0,2	54	46	27
	38	32	±0,3	61	55	29

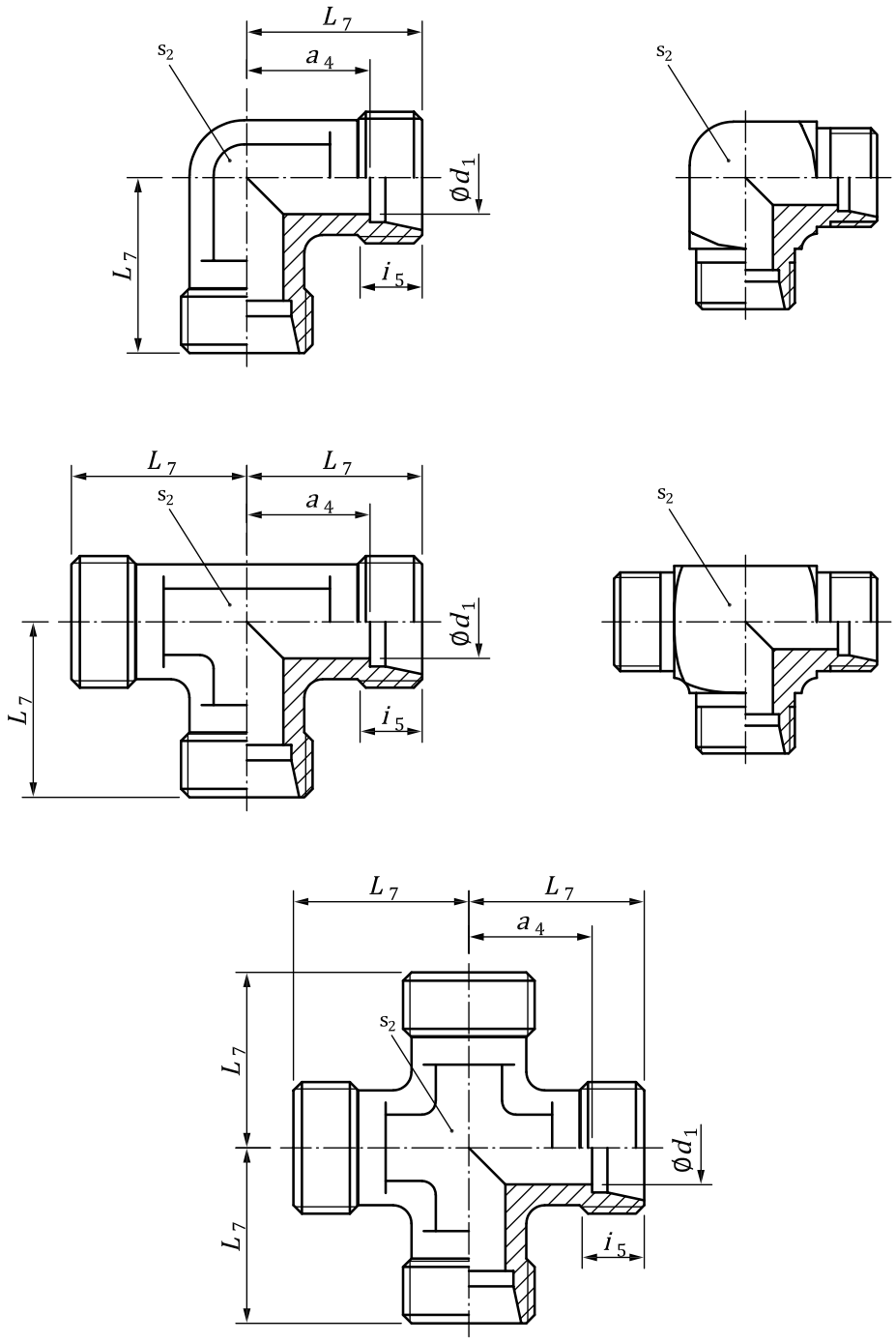

Figure 14 — Elbow (E), tee (T) and cross (K) union connectors

Table 10 — Dimensions of elbow, tee and cross union connectors

Dimensions in millimetres

Series	Tube OD	d_1		i_5	L_7	s_2		a_4
						Forged connector	Connector machined from barstock	
		nom.	tol.	min.	±0,3	min.	max.	ref.
LL	4	3	±0,1	6	15	9	9	11
	5	3,5	±0,1	6	15	9	11	9,5
	6	4,5	±0,1	6	15	9	11	9,5
	8	6	±0,1	7	17	12	12	11,5
L	6	4	±0,1	7	19	12	12	12
	8	6	±0,1	7	21	12	14	14
	10	8	±0,2	8	22	14	17	15
	12	10	±0,2	8	24	17	19	17
	15	12	±0,2	9	28	19	—	21
	18	15	±0,2	9	31	24	—	23,5
	22	19	±0,2	10	35	27	—	27,5
	28	24	±0,2	10	38	36	—	30,5
	35	30	±0,3	12	45	41	—	34,5
	42	36	±0,3	12	51	50	—	40
S	6	4	±0,1	9	23	12	14	16
	8	5	±0,2	9	24	14	17	17
	10	7	±0,2	9	25	17	19	17,5
	12	8	±0,2	9	29	17	22	21,5
	16	12	±0,2	11	33	24	—	24,5
	20	16	±0,2	12	37	27	—	26,5
	25	20	±0,2	14	42	36	—	30
	30	25	±0,2	16	49	41	—	35,5
	38	32	±0,3	18	57	50	—	41

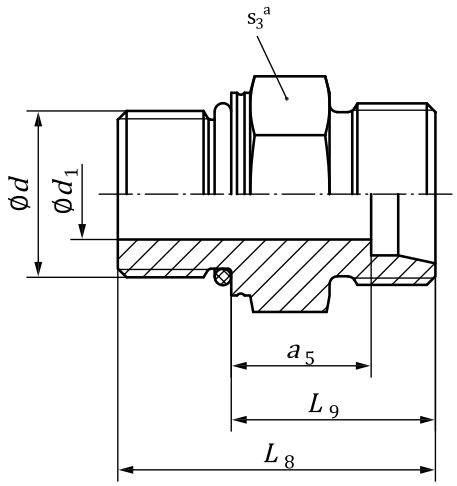

a Width across flats.

Figure 15 — Stud connector (SDS) with stud end in accordance with ISO 6149-2 (S Series) or ISO 6149-3 (L Series)

Table 11 — Dimensions of stud connectors with stud end in accordance with ISO 6149-2 (S Series) or ISO 6149-3 (L Series)

Dimensions in millimetres

Series	Tube OD	d Thread[a]	d_1 ref.	L_9 ref.	L_8 ±0,3	s_3	a_5 ref.
L	6	M10 × 1	4	16,5	25	14	9,5
	8	M12 × 1,5	6	17	28	17	10
	10	M14 × 1,5	7	18	29	19	11
	12	M16 × 1,5	9	19,5	31	22	12,5
	15	M18 × 1,5	11	20,5	33	24	13,5
	18	M22 × 1,5	14	22	35	27	14,5
	22	M27 × 2	18	24	40	32	16,5
	28	M33 × 2	23	25	41	41	17,5
	35	M42 × 2	30	28	44	50	17,5
	42	M48 × 2	36	30	47,5	55	19
S	6	M12 × 1,5	4	20	31	17	13
	8	M14 × 1,5	5	22	33	19	15
	10	M16 × 1,5	7	22,5	35	22	15
	12	M18 × 1,5	8	24,5	38,5	24	17
	16	M22 × 1,5	12	27	42	27	18,5
	20	M27 × 2	15	31	49,5	32	20,5
	25	M33 × 2	20	35	53,5	41	23
	30	M42 × 2	25	37	56	50	23,5
	38	M48 × 2	32	42	63,5	55	26

a For further details, see ISO 6149-3 (regular length) for the L series and ISO 6149-2 for the S series.

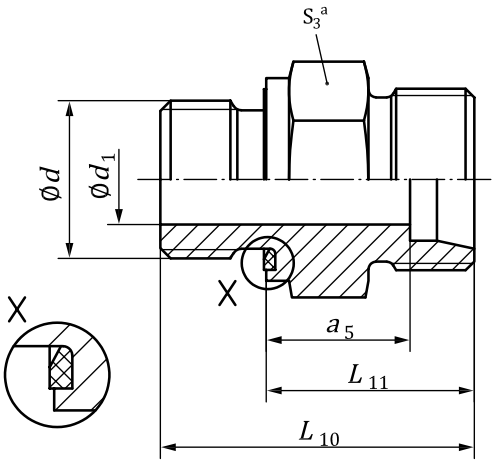

a Width across flats.

Figure 16 — Stud connector (SDS) with stud end in accordance with ISO 1179-2 or ISO 9974-2

Table 12 — Dimensions of stud connectors with stud end in accordance with ISO 1179-2 or ISO 9974-2

Dimensions in millimetres

Series	Tube OD	ISO 9974-2[a, b]						ISO 1179-2[a, b]					
		Thread ISO 724 d	d_1 ref.	L_{11} ref.	L_{10} ±0,3	s_3	a_5 ref.	Thread ISO 228-1 d	d_1 ref.	L_{11} ref.	L_{10} ±0,3	s_3	a_5 ref.
L	6	M10 × 1	4	15,5	23,5	14	8,5	G 1/8 A	4	15,5	23,5	14	8,5
	8	M12 × 1,5	6	17	29	17	10	G 1/4 A	6	17	29	19	10
	10	M14 × 1,5	7	18	30	19	11	G 1/4 A	6	18	30	19	11
	12	M16 × 1,5	9	19,5	31,5	22	12,5	G 3/8 A	9	19,5	31,5	22	12,5
	15	M18 × 1,5	11	20,5	32,5	24	13,5	G 1/2 A	11	21	35	27	14
	18	M22 × 1,5	14	22	36	27	14,5	G 1/2 A	14	22	36	27	14,5
	22	M26 × 1,5	18	24	40	32	16,5	G 3/4 A	18	24	40	32	16,5
	28	M33 × 2	23	25	43	41	17,5	G 1 A	23	25	43	41	17,5
	35	M42 × 2	30	28	48	50	17,5	G 1 1/4 A	30	28	48	50	17,5
	42	M48 × 2	36	30	52	55	19	G 1 1/2 A	36	30	52	55	19
S	6	M12 × 1,5	4	20	32	17	13	G 1/4 A	4	20	32	19	13
	8	M14 × 1,5	5	22	34	19	15	G 1/4 A	5	22	34	19	15
	10	M16 × 1,5	7	22,5	34,5	22	15	G 3/8 A	7	22,5	34,5	22	15
	12	M18 × 1,5	8	24,5	36,5	24	17	G 3/8 A	8	24,5	36,5	22	17
	12	—	—	—	—	—	—	G 1/2 A	8	25	39	27	17,5
	16	M22 × 1,5	12	27	41	27	18,5	G 1/2 A	12	27	41	27	18,5
	16	—	—	—	—	—	—	G 3/4 A	12	29	45	32	20,5
	20	M27 × 2	16	31	47	32	20,5	G 3/4 A	16	31	47	32	20,5

a For further details on sealing, see the relevant part(s) of ISO 9974 and ISO 1179.

b For general applications only. For new designs in hydraulic fluid power applications, stud end dimensions shall be in accordance with the relevant part of ISO 6149.

Table 12 *(continued)*

Series	Tube OD	ISO 9974-2[a, b]						ISO 1179-2[a, b]					
		Thread ISO 724 d	d_1 ref.	L_{11} ref.	L_{10} ±0,3	s_3	a_5 ref.	Thread ISO 228-1 d	d_1 ref.	L_{11} ref.	L_{10} ±0,3	s_3	a_5 ref.
	25	M33 × 2	20	35	53	41	23	G 1 A	20	35	53	41	23
	30	M42 × 2	25	37	57	50	23,5	G 1 1/4 A	25	37	57	50	23,5
	38	M48 × 2	32	42	64	55	26	G 1 1/2 A	32	42	64	55	26

[a] For further details on sealing, see the relevant part(s) of ISO 9974 and ISO 1179.

[b] For general applications only. For new designs in hydraulic fluid power applications, stud end dimensions shall be in accordance with the relevant part of ISO 6149.

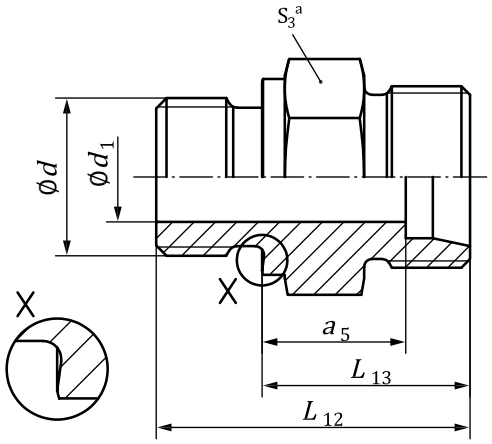

[a] Width across flats.

Figure 17 — Stud connector (SDS) with stud end in accordance with ISO 1179-4 or ISO 9974-3

Table 13 — Dimensions for stud connectors with stud end in accordance with ISO 1179-4 or ISO 9974-3

Dimensions in millimetres

Series	Tube OD	ISO 9974-3[a]						ISO 1179-4[a]					
		Thread ISO 724 d	d_1 ref.	L_{13} ref.	L_{12} ±0,3	s_3	a_5 ref.	Thread ISO 228-1 d	d_1 ref.	L_{13} ref.	L_{12} ±0,3	s_3	a_5 ref.
LL	4	M8 × 1	3	13,5	21,5	12	9,5	G 1/8 A	3	13,5	21,5	14	9,5
	5	M8 × 1	3	13,5	21,5	12	8	G 1/8 A	3	13,5	21,5	14	8
	6	M10 × 1	4	13,5	21,5	14	8	G 1/8 A	4	13,5	21,5	14	8
	8	M10 × 1	4,5	14,5	22,5	14	9	G 1/8 A	4,5	14,5	22,5	14	9
L	6	M10 × 1	4	15,5	23,5	14	8,5	G 1/8 A	4	15,5	23,5	14	8,5
	8	M12 × 1,5	6	17	29	17	10	G 1/4 A	6	17	29	19	10
	10	M14 × 1,5	7	18	30	19	11	G 1/4 A	6	18	30	19	11
	12	M16 × 1,5	9	19,5	31,5	22	12,5	G 3/8 A	9	19,5	31,5	22	12,5
	15	M18 × 1,5	11	20,5	32,5	24	13,5	G 1/2 A	11	21	35	27	14
	18	M22 × 1,5	14	22	36	27	14,5	G 1/2 A	14	22	36	27	14,5

[a] For general applications only. For new designs in hydraulic fluid power applications, stud end dimensions shall be in accordance with the relevant part of ISO 6149.

Table 13 *(continued)*

Series	Tube OD	ISO 9974-3[a]						ISO 1179-4[a]					
		Thread ISO 724 d	d_1 ref.	L_{13} ref.	L_{12} ±0,3	s_3	a_5 ref.	**Thread ISO 228-1** d	d_1 ref.	L_{13} ref.	L_{12} ±0,3	s_3	a_5 ref.
	22	M26 × 1,5	18	24	40	32	16,5	G 3/4 A	18	24	40	32	16,5
	28	M33 × 2	23	25	43	41	17,5	G 1 A	23	25	43	41	17,5
	35	M42 × 2	30	28	48	50	17,5	G 1 1/4 A	30	28	48	50	17,5
	42	M48 × 2	36	30	52	55	19	G 1 1/2 A	36	30	52	55	19
S	6	M12 × 1,5	4	20	32	17	13	G 1/4 A	4	20	32	19	13
	8	M14 × 1,5	5	22	34	19	15	G 1/4 A	5	22	34	19	15
	10	M16 × 1,5	7	22,5	34,5	22	15	G 3/8 A	7	22,5	34,5	22	15
	12	M18 × 1,5	8	24,5	36,5	24	17	G 3/8 A	8	24,5	36,5	22	17
	12	—	—	—	—	—	—	G 1/2 A	8	25	39	27	17,5
	16	M22 × 1,5	12	27	41	27	18,5	G 1/2 A	12	27	41	27	18,5
	16	—	—	—	—	—	—	G 3/4 A	12	29	45	32	20,5
	20	M27 × 2	16	31	47	32	20,5	G 3/4 A	16	31	47	32	20,5
	25	M33 × 2	20	35	53	41	23	G 1 A	20	35	53	41	23
	30	M42 × 2	25	37	57	50	23,5	G 1 1/4 A	25	37	57	50	23,5
	38	M48 × 2	32	42	64	55	26	G 1 1/2 A	32	42	64	55	26

[a] For general applications only. For new designs in hydraulic fluid power applications, stud end dimensions shall be in accordance with the relevant part of ISO 6149.

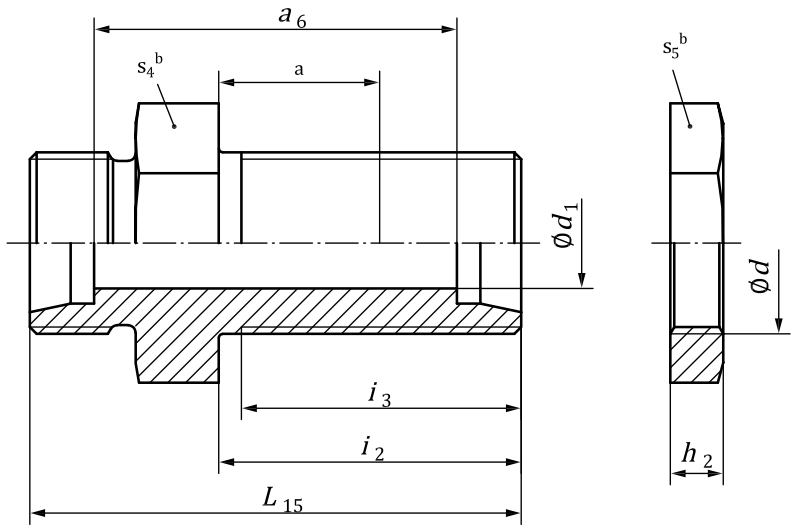

[a] Maximum bulkhead thickness: 16 mm.

[b] Width across flats.

Figure 18 — Bulkhead straight connector (BHS) and locknut (LN)

Table 14 — Dimensions of bulkhead straight connectors and locknuts

Dimensions in millimetres

Series	Tube OD	Bulkhead union connectors						Locknuts[a]		
		d_1 ref.	i_3 min.	i_2 ±0,2	L_{15} ±0,3	s_4	a_6 ref.	Thread d	s_5	h_2 ±0,2
L	6	4	30	34	48	17	34	M12 × 1,5	17	6
	8	6	30	34	49	19	35	M14 × 1,5	19	6
	10	8	31	35	52	22	38	M16 × 1,5	22	6
	12	10	32	36	53	24	39	M18 × 1,5	24	6
	15	12	34	38	57	27	43	M22 × 1,5	30	7
	18	15	36	40	61	32	46	M26 × 1,5	36	8
	22	19	37	42	66	36	51	M30 × 2	41	8
	28	24	38	43	69	41	54	M36 × 2	46	9
	35	30	42	47	76	50	55	M45 × 2	55	9
	42	36	42	47	77	60	55	M52 × 2	65	10
S	6	4	32	36	55	19	41	M14 × 1,5	19	6
	8	5	32	36	56	22	42	M16 × 1,5	22	6
	10	7	33	37	59	24	44	M18 × 1,5	24	6
	12	8	34	38	60	27	45	M20 × 1,5	27	6
	16	12	36	40	65	32	48	M24 × 1,5	32	7
	20	16	39	44	72	41	51	M30 × 2	41	8
	25	20	42	47	79	46	55	M36 × 2	46	9
	30	25	46	51	86	50	59	M42 × 2	50	9
	38	32	48	53	91	65	59	M52 × 2	65	10

[a] Locknuts for the following tube ODs in the L and S series share identical dimensions:

L series tube OD 8 and S series tube OD 6; L series tube OD 10 and S series tube OD 8;

L series tube OD 12 and S series tube OD 10; L series tube OD 22 and S series tube OD 20;

L series tube OD 28 and S series tube OD 25; L series tube OD 42 and S series tube OD 38.

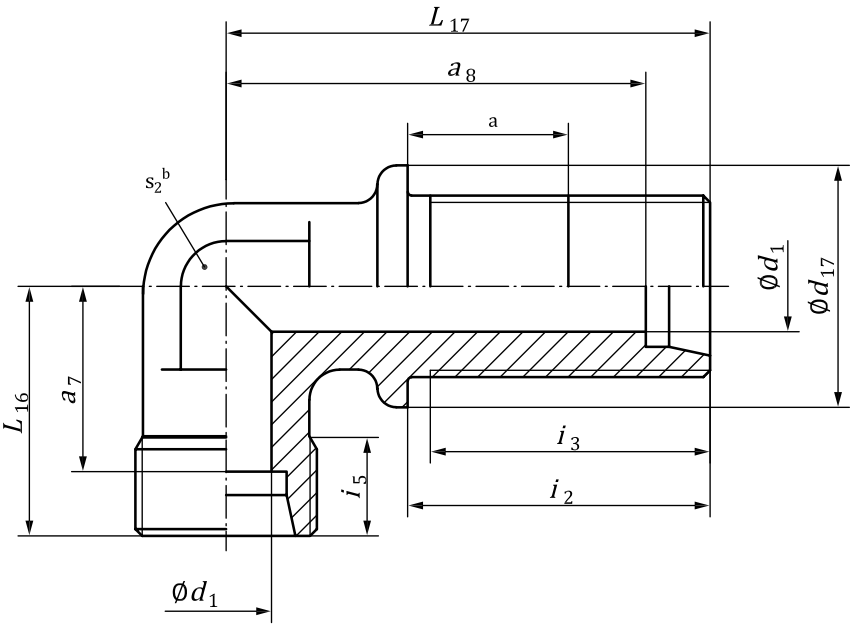

a Maximum bulkhead thickness: 16 mm.

b Width across flats.

Figure 19 — Bulkhead elbow (BHE)

Table 15 — Dimensions of bulkhead elbows

Dimensions in millimetres

Series	Tube OD	d_1 ref.	d_{17} $^{+1}_{-0,8}$	i_5 min.	i_3 min.	i_2 ±0,2	L_{16} ±0,3	L_{17} ±0,3	s_2	a_7 ref.	a_8 ref.
L	6	4	17	7	30	34	19	48	12	12	41
	8	6	19	7	30	34	21	51	12	14	44
	10	8	22	8	31	35	22	53	14	15	46
	12	10	24	8	32	36	24	56	17	17	49
	15	12	27	9	34	38	28	61	19	21	54
	18	15	32	9	36	40	31	64	24	23,5	56,5
	22	19	36	10	37	42	35	72	27	27,5	64,5
	28	24	42	10	38	43	38	77	36	30,5	69,5
	35	30	50	12	42	47	45	86	41	34,5	75,5
	42	36	60	12	42	47	51	90	50	40	79
S	6	4	19	9	32	36	23	53	12	16	46
	8	5	22	9	32	36	24	54	14	17	47
	10	7	24	9	33	37	25	57	17	17,5	49,5
	12	8	27	9	34	38	29	59	17	21,5	51,5
	16	12	30	11	36	40	33	64	24	24,5	55,5
	20	16	36	12	39	44	37	74	27	26,5	63,5
	25	20	42	14	42	47	42	81	36	30	69
	30	25	50	16	46	51	49	90	41	35,5	76,5
	38	32	60	18	48	53	57	96	50	41	80

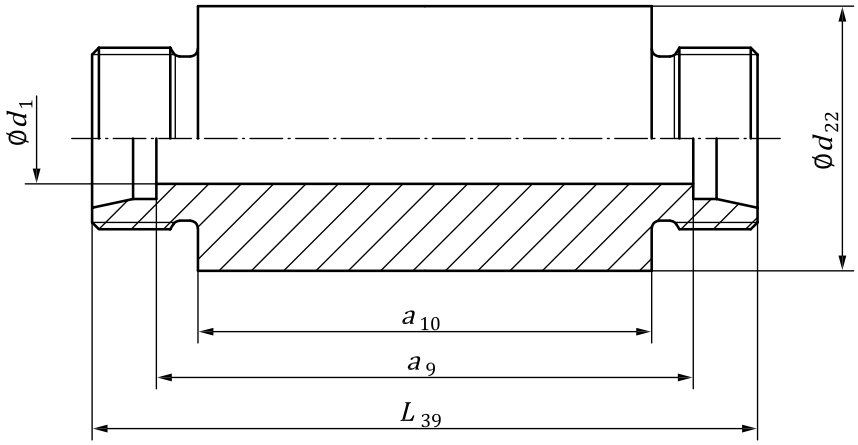

Figure 20 — Weld-in bulkhead straight connector (WDBHS)

Table 16 — Dimensions of weld-in bulkhead connectors

Dimensions in millimetres

Series	Tube OD	d_{22} ±0,2	d_1 ref.	L_{39} ±0,3	a_9 ref.	a_{10} ref.
L	6	18	4	70	56	50
	8	20	6	70	56	50
	10	22	8	72	58	50
	12	25	10	72	58	50
	15	28	12	84	70	60
	18	32	15	84	69	60
	22	36	19	88	73	60
	28	40	24	88	73	60
	35	50	30	92	71	60
	42	60	36	92	70	60
S	6	20	4	74	60	50
	8	22	5	74	50	50
	10	25	7	74	59	50
	12	28	8	74	59	50
	16	35	12	88	71	60
	20	38	16	92	71	60
	25	45	20	96	72	60
	30	50	25	100	73	60
	38	60	32	104	72	60

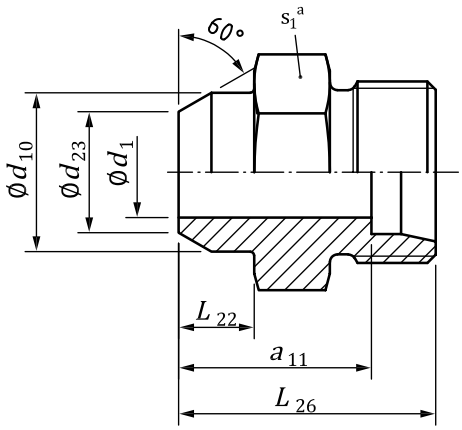

a Width across flats.

Figure 21 — Weld-on straight connector (WDS)

Table 17 — Dimensions of weld-on straight connectors

Dimensions in millimetres

Series	Tube OD	d_{10} ±0,2	d_{23} ±0,2	d_1 ref.	L_{22} ±0,2	L_{26} ±0,3	s_1	a_{11} ref.
L	6	10	6	4	7	21	12	14
	8	12	8	6	8	23	14	16
	10	14	10	8	8	25	17	18
	12	16	12	10	8	25	19	18
	15	19	15	12	10	29	22	22
	18	22	18	15	10	31	27	23,5
	22	27	22	19	12	36	32	28,5
	28	32	28	24	12	38	41	30,5
	35	40	35	30	14	43	46	32,5
	42	46	42	36	16	46	55	35
S	6	11	6	4	7	26	14	19
	8	13	8	5	8	28	17	21
	10	15	10	7	8	30	19	22,5
	12	17	12	8	10	32	22	24,5
	16	21	16	12	10	35	27	26,5
	20	26	20	16	12	40	32	29,5
	25	31	24	20	12	44	41	32
	30	36	29	25	14	49	46	35,5
	38	44	36	32	16	54	55	38

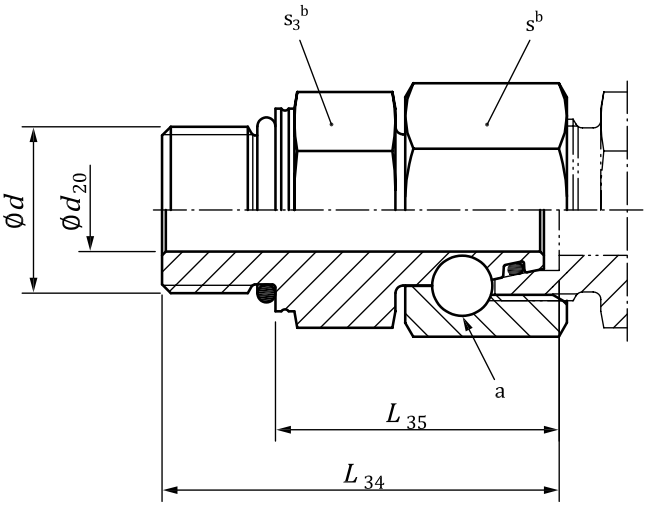

a Method of swivel nut attachment is at the option of the manufacturer.

b Width across flats.

Figure 22 — Swivel stud straight adapters with O-ring (SWOSDS) with stud end in accordance with ISO 6149-2 (S series) or ISO 6149-3 (L series)

Table 18 — Dimensions of swivel stud straight adapters with O-ring (SWOSDS) with stud end in accordance with ISO 6149-2 (S series) or ISO 6149-3 (L series)

Dimensions in millimetres

Series	Tube OD	Thread d	d_{20} min.	L_{34} ±0,5	L_{35} ref.	s_3	s
L	6	M10 × 1	2,5	33	24,5	14	14
	8	M12 × 1,5	4	37,5	26,5	17	17
	10	M14 × 1,5	6	38,5	27,5	19	19
	12	M16 × 1,5	8	42	30,5	22	22
	15	M18 × 1,5	10	44	31,5	24	27
	18	M22 × 1,5	13	44,5	31,5	27	32
	22	M27 × 2	17	48,5	32,5	32	36
	28	M33 × 2	22	51	35	41	41[a]
	35	M42 × 2	28	58,5	42,5	50	50
	42	M48 × 2	34	64	46,5	55	60
S	6	M12 × 1,5	2,5	38	27	17	17
	8	M14 × 1,5	4	40,5	29,5	19	19
	10	M16 × 1,5	6	44,5	32	22	22
	12	M18 × 1,5	8	48	34	24	24
	16	M22 × 1,5	11	52	37	27	30
	20	M27 × 2	14	61,5	43	32	36
	25	M33 × 2	18	66,5	48	41	46
	30	M42 × 2	23	70	51	50	50
	38	M48 × 2	30	81,5	60	55	60

a Alternative hex size: 46 mm.

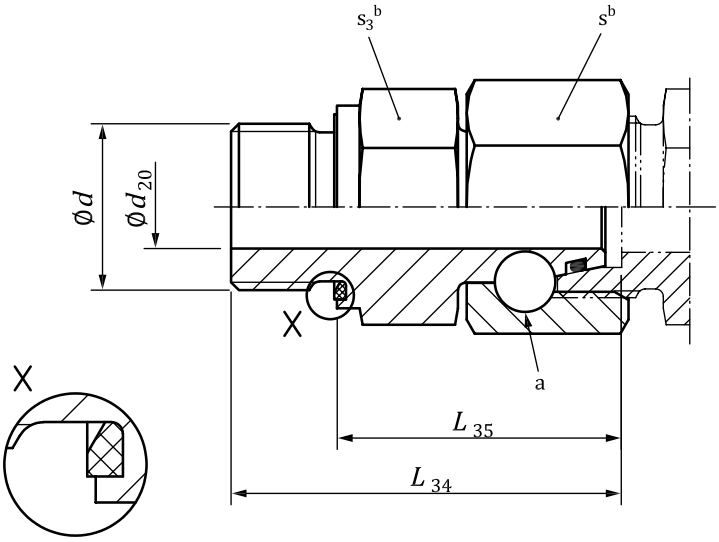

Key

a Method of swivel nut attachment is at the option of the manufacturer.

b Width across flats.

Figure 23 — Swivel stud straight adapter with O-ring (SWODS) with stud end with profile seal in accordance with ISO 1179-2 or ISO 9974-2

Table 19 — Dimensions of swivel stud straight adapters with O-ring (SWODS) with stud end with profile seal in accordance with ISO 1179-2 or ISO 9974-2

Dimensions in millimetres

Series	Tube OD	s	ISO 1179-2[a]					ISO 9974-2[a]				
			Thread ISO 228-1 d	d_{20} min.	L_{34} ±0,5	L_{35} ref.	s_3	Thread ISO 724 d	d_{20} min.	L_{34} ±0,5	L_{35} ref.	s_3
L	6	14	G 1/8 A	2,5	32,5	24,5	14	M10 × 1	2,5	32,5	24,5	14
	8	17	G 1/4 A	4	41,5	29,5	19	M12 × 1,5	4	38,5	26,5	17
	10	19	G 1/4 A	6	39,5	27,5	19	M14 × 1,5	6	39,5	27,5	19
	12	22	G 3/8 A	8	46	34	22	M16 × 1,5	8	42,5	30,5	22
	15	27	G 1/2 A	10	46	32	27	M18 × 1,5	10	43,5	31,5	24
	18	32	G 1/2 A	13	45,5	31,5	27	M22 × 1,5	13	45,5	31,5	27
	22	36	G 3/4 A	17	48,5	32,5	32	M26 × 1,5	17	48,5	32,5	32
	28	41[b]	G 1 A	22	53	35	41	M33 × 2	22	53	35	41
	35	50	G 1 1/4 A	28	62,5	42,5	50	M42 × 2	28	62,5	42,5	50
	42	60	G 1 1/2 A	34	68,5	46,5	55	M48 × 2	34	68,5	46,5	55
S	6	17	G 1/4 A	2,5	39	27	19	M12 × 1,5	2,5	39	27	17
	8	19	G 1/4 A	4	41,5	29,5	19	M14 × 1,5	4	41,5	29,5	19
	10	22	G 3/8 A	6	44	32	22	M16 × 1,5	6	44	32	22
	12	24	G 3/8 A	8	46	34	22	M18 × 1,5	8	46	34	24
	12	24	G 1/2 A	8	48,5	34,5	27	—	—	—	—	—
	16	30	G 1/2 A	11	51	37	27	M22 × 1,5	11	51	37	27

[a] For general applications only. For new designs in hydraulic fluid power applications, stud end dimensions shall be in accordance with the relevant part of ISO 6149.

[b] Alternative hex size: 46 mm.

Table 19 *(continued)*

Series	Tube OD	s	ISO 1179-2[a]					ISO 9974-2[a]				
			Thread ISO 228-1 d	d_{20} min.	L_{34} ±0,5	L_{35} ref.	s_3	Thread ISO 724 d	d_{20} min.	L_{34} ±0,5	L_{35} ref.	s_3
	16	30	G 3/4 A	11	55	39	32	—	—	—	—	—
	20	36	G 3/4 A	14	59	43	32	M27 × 2	14	59	43	32
	25	46	G 1 A	18	66	48	41	M33 × 2	18	66	48	41
	30	50	G 1 1/4 A	23	71	51	50	M42 × 2	23	71	51	50
	38	60	G 1 1/2 A	30	82	60	55	M48 × 2	30	82	60	55

[a] For general applications only. For new designs in hydraulic fluid power applications, stud end dimensions shall be in accordance with the relevant part of ISO 6149.

[b] Alternative hex size: 46 mm.

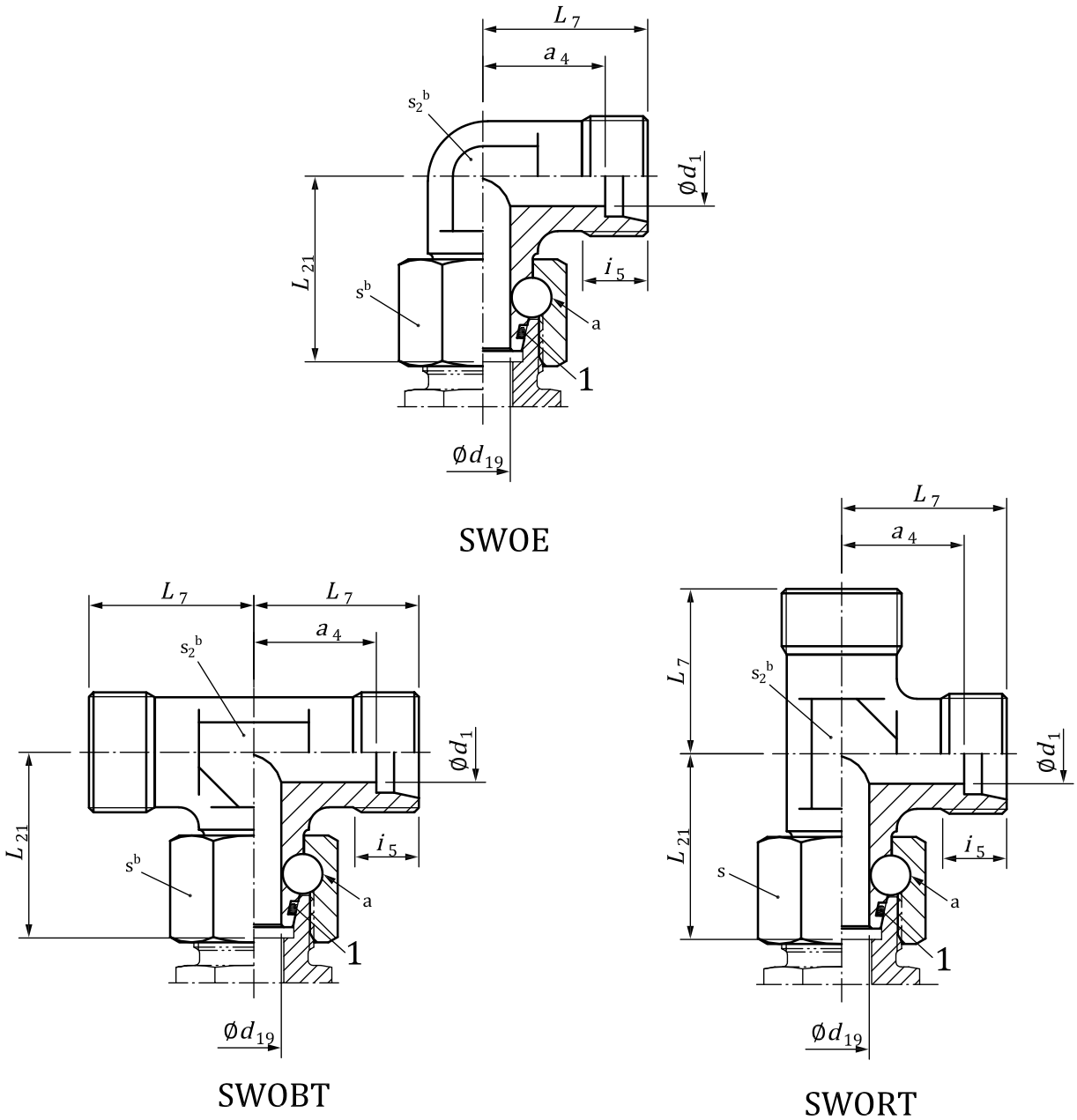

Key

1 O-ring

a Method of swivel nut attachment is at the option of the manufacturer.

b Width across flats.

Figure 24 — Swivel elbow (SWOE), branch tee (SWOBT) and run tee (SWORT) with O-ring

Table 20 — Dimensions of swivel elbows, swivel branch tees and swivel run tees with O-ring

Dimensions in millimetres

Series	Tube OD	d_1	d_{19}	L_{21}	L_7	a_4	i_5	s_2		s
								Forged connector	**Connector machined from barstock**	
		ref.	min.	±0,5	±0,3	ref.	min.	min.	max.	
L	6	4	2,5	26	19	12	7	12	—	14
	8	6	4	27,5	21	14	7	12	14	17
	10	8	6	29	22	15	8	14	17	19
	12	10	8	29,5	24	17	8	17	19	22
	15	12	10	32,5	28	21	9	19	—	27
	18	15	13	35,5	31	23,5	9	24	—	32
	22	19	17	38,5	35	27,5	10	27	—	36
	28	24	22	41,5	38	30,5	10	36	—	41[a]
	35	30	28	51	45	34,5	12	41	—	50
	42	36	34	56	51	40	12	50	—	60
S	6	4	2,5	27	23	16	9	12	14	17
	8	5	4	27,5	24	17	9	14	17	19
	10	7	6	30	25	17,5	9	17	19	22
	12	8	8	31	29	21,5	9	17	22	24
	16	12	11	36,5	33	24,5	11	24	—	30
	20	16	14	44,5	37	26,5	12	27	—	36
	25	20	18	50	42	30	14	36	—	46
	30	25	23	55	49	35,5	16	41	—	50
	38	32	30	63	57	41	18	50	—	60

[a] Alternative hex size: 46 mm.

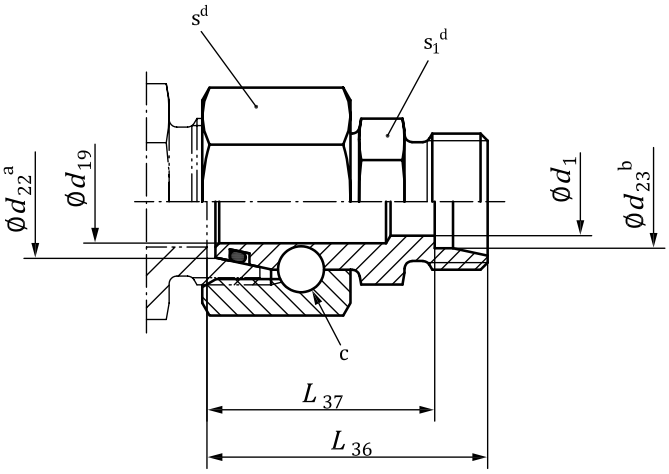

Key

a Tube OD (d_{22}).

b Tube OD (d_{23}).

c Method of swivel nut attachment is at the option of the manufacturer.

d Width across flats.

Figure 25 — Reducing swivel straight adapter with O-ring (RDSW)

Table 21 — Dimensions of reducing swivel straight adapters with O-ring

Dimensions in millimetres

Series	Tube OD d_{22} ref.	Tube OD d_{23} ref.	d_1 ref.	d_{19} min.	L_{36} ±0,5	L_{37} ref.	s_1	s
L	8	6	4	4	30,5	23,5	12	17
	10	6	4	6	32	25	14	19
		8	6	6	32	25		
	12	6	4	8	32	25	17	22
		8	6	8	32	25		
		10	8	8	33	26		
	15	10	8	10	36,5	29,5	19 (22)	27
		12	10	10	36,5	29,5		
	18	15	12	12	37	30	24	32
	22	15	12	17	41	34	27	36
		18	15	17	41	33,5		
	28	15	12	22	43	36	32 (36)	41 (46)
		18	15	22	43	35,5		
		22	19	22	45	37,5		
	35	15	12	28	46	39	41 (46)	50
		18	15	28	46	38,5		
		22	19	28	48	40,5		
		28	24	28	48	40,5		

Table 21 *(continued)*

Series	Tube OD d_{22} ref.	d_{23} ref.	d_1 ref.	d_{19} min.	L_{36} ±0,5	L_{37} ref.	s_1	s
	42	15	12	34	49,5	42,5	50	60
		18	15	34	49,5	42		
		22	19	34	51,5	44		
		28	24	34	51,5	44		
		35	30	34	53,5	43		
S	8	6	4	4	34	27	14	19
	10	6	4	6	34,5	27,5	17	22
		8	5	6	34,5	27,5		
	12	6	4	8	37	29	19	24
		8	5	8	37	29		
		10	7	8	37	29,5		
	16	6	4	11	39	32	22	30
		8	5	11	39	32		
		10	7	11	39	31,5		
		12	8	11	39	31,5		
	20	6	4	14	43	36	27	36
		8	5	14	43	36		
		10	7	14	43	35,5		
		12	8	14	43	35,5		
		16	12	14	45	36,5		
	25	6	4	18	45,5	38,5	32 (36)	46
		8	5	18	45,5	38,5		
		10	7	18	45,5	38		
		12	8	18	45,5	38		
		16	12	18	47,5	39		
		20	16	18	49,5	39		
	30	6	4	23	51	44	41	50
		8	5	23	51	44		
		10	7	23	51	43,5		
		12	8	23	51	43,5		
		16	12	23	53	44,5		
		20	16	23	55	44,5		
		25	20	23	57	45		
	38	6	4	30	54,5	47,5	50	60
		8	5	30	54,5	47,5		
		10	7	30	54,5	47		
		12	8	30	54,5	47		
		16	12	30	56,5	48		
		20	16	30	58,5	48		
		25	20	30	60,5	48,5		
		30	25	30	62,5	49		

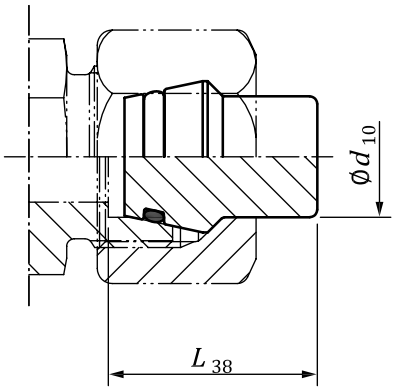

Figure 26 — Plug with O-ring (PL)

Table 22 — Dimensions of plugs with O-ring

Dimensions in millimetres

Series	Tube OD d_{10}	L_{38} ±0,5
L	6	19,0
	8	19,0
	10	20,5
	12	21,0
	15	21,0
	18	23,5
	22	26,0
	28	26,5
	35	32,0
	42	32,5
S	6	19,0
	8	19,0
	10	21,0
	12	21,5
	16	25,0
	20	30,5
	25	32,5
	30	35,5
	38	40,5

Annex A
(normative)

Assembly instructions for 24° cone connectors using cutting ring conforming to ISO 8434-1

NOTICE: Best practice regarding reliability and safety is achieved by pre-assembling the cutting rings using machines. For machines suitable for this operation, along with tools and setup parameters, the connector manufacturer should be consulted.

A.1 Cutting ring direct assembly into coupling body

Follow the instructions of Table A.1 unless otherwise specified by the manufacturer.

Table A.1 — Cutting ring direct assembly

Instruction	Illustration
Step 1: Preparation of tube Cut tube off at a right angle. A maximum angular deviation of 0,5° relative to the tube axis is permissible. Do not use pipe cutters or cutting-off wheels as they cause severe burring and angular cuts. Use of a precision cut-off machine or device is recommended. Lightly deburr tube ends inside and out (maximum 0,2 × 45°), and clean them. ATTENTION — Thin-walled tubes may require supportive tube inserts; see manufacturer's assembly instructions. Deformation or irregularities such as inclined sawed-off tubes or excessively deburred tubes reduce the integrity, life expectancy and the sealing of the tube connection.	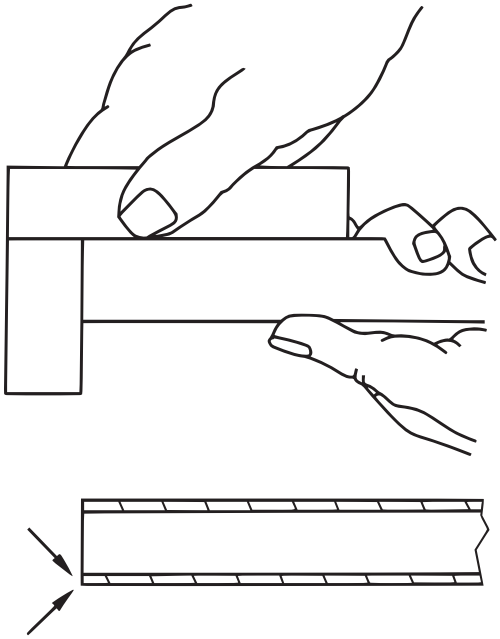
Step 2: Lubrication and orientation Lubricate thread and 24° cone of the body and the thread of the nut. Place nut and cutting ring on the tube with the cutting edge towards the tube end, as shown. Ensure that the cutting ring is facing the correct direction to prevent assembly error.	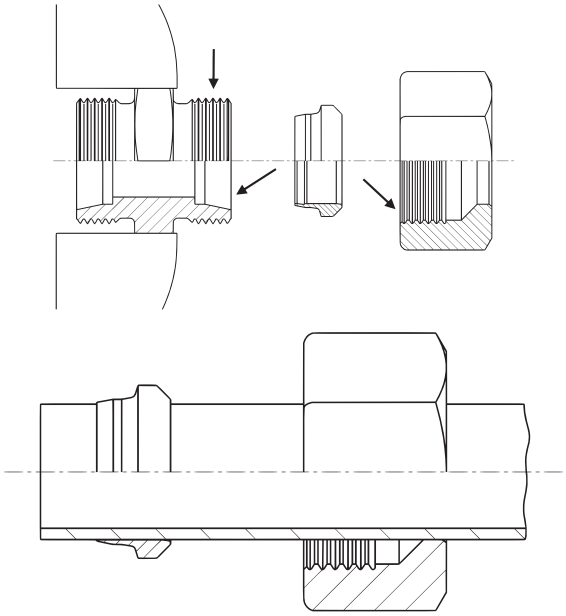
Step 3: Initial assembly Assemble the nut by hand until contact of the body, cutting ring and nut becomes noticeable. Insert the tube into the connector body so the tube bottoms out on the tube stop. The tube shall touch the tube stop to ensure that the cutting ring bites into the tube correctly.	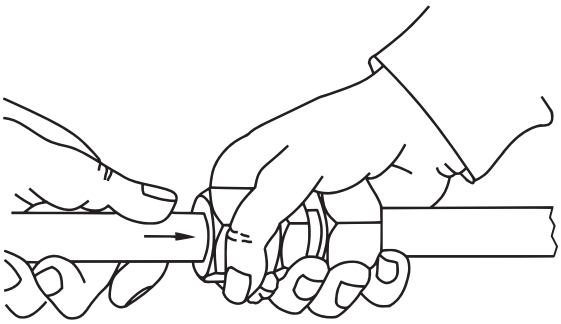

Table A.1 *(continued)*

Instruction	Illustration
Step 4: Tightening Tighten the nut with a wrench according to the recommended number of wrenching turns specified by the manufacturer. Hold the connector body firmly by means of a second wrench or a vise. NOTE Deviating from the recommended number of assembly turns can lead to reduced pressure performance and life expectancy of the tube connection. Leakage and tube slippage can occur.	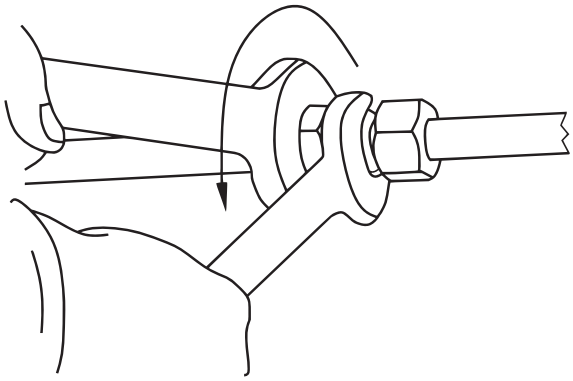
Step 5: Check Disassemble the tube connection. Check penetration of cutting edge. If the connector was assembled correctly, a ring of material distributed equally will be visible and should completely cover the front cutting edge. The cutting ring may turn on tube freely, but it should not be capable of axial displacement.	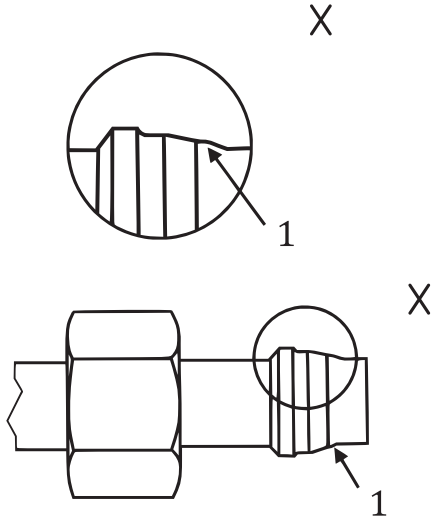 **Key** 1 ring of material
Re-assembly Each time the connector is disassembled, the nut shall be re-tightened firmly using the same torque as required for initial assembly. Hold the connector body firmly with one wrench, and turn nut with another wrench.	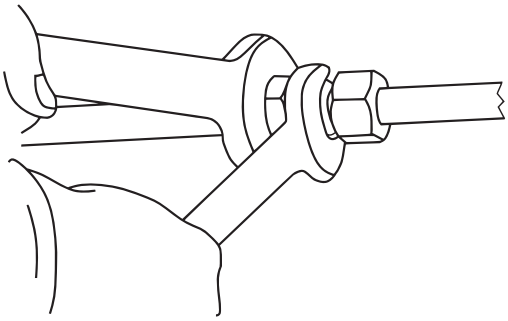
Minimum length of straight tube end for tube bends The length of undeformed straight tube (2 × h) shall be at least twice the length of the nut (h). The straight tube end may not exceed any deviation of roundness or straightness which exceeds the dimensional tolerances of the tube.	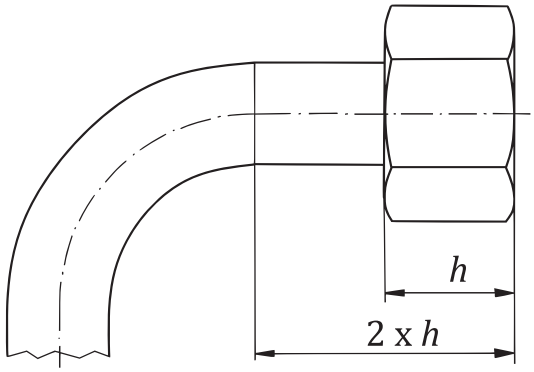

A.2 Cutting ring pre-assembly using a manual pre-assembly adapter for final assembly in the connector body

Follow the instructions of Table A.2 unless otherwise specified by the manufacturer.

Table A.2 — Cutting ring pre-assembly using a manual pre-assembly adapter for final assembly in the connector body

Instruction	Illustration
Step 1: Inspection The cones of manual pre-assembly adapters are subject to the usual wear. Therefore they shall be checked in regular intervals by cone gauges after every 50 assemblies. Non-gauge size adaptors shall be replaced to prevent from assembly faults.	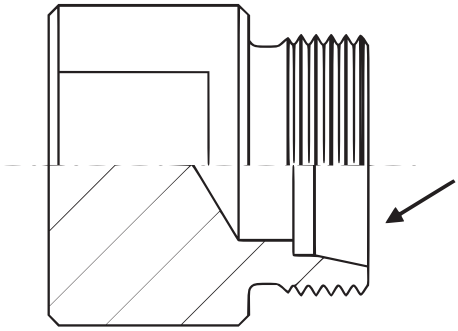
Step 2: Preparation of tube Cut tube off at a right angle. A maximum angular deviation of 0,5° relative to the tube axis is permissible. Do not use pipe cutters or cutting-off wheels as they cause severe burring and angular cuts. Use of a precision cut-off machine or device is recommended. Lightly deburr tube ends inside and out (maximum 0,2 × 45°), and clean them. ATTENTION — Thin-walled tubes may require supportive tube inserts; see manufacturer's assembly instructions. Deformation or irregularities such as inclined sawed-off tubes or excessively deburred tubes reduce the integrity, life expectancy and the sealing of the tube connection.	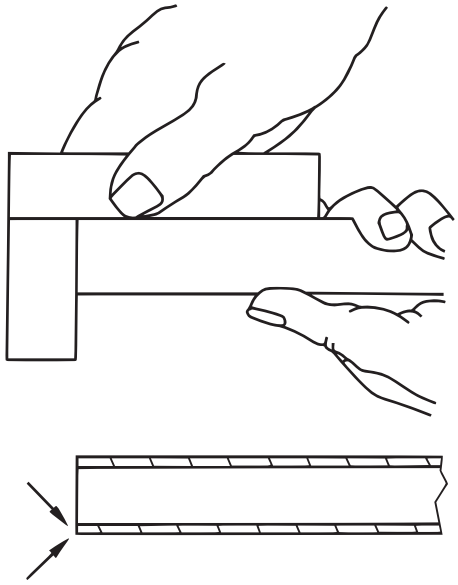
Step 3: Lubrication and orientation Lubricate thread and 24° cone of the body and the thread of the nut. Place nut and cutting ring on the tube with the cutting edge towards the tube end, as shown. Ensure that the cutting ring is facing the correct direction to prevent assembly error.	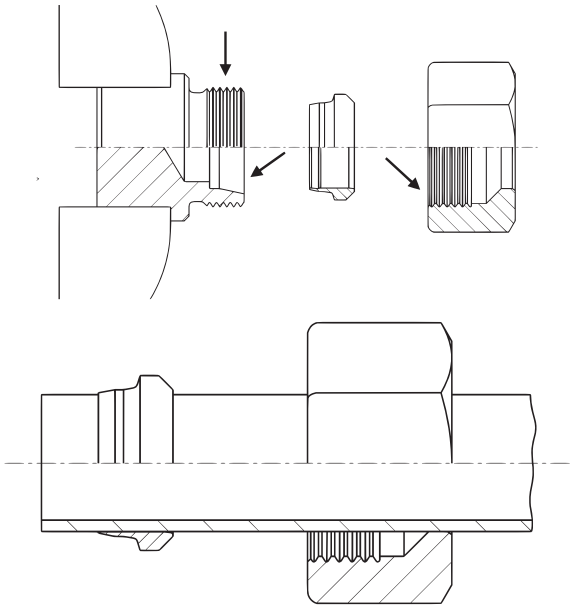

Table A.2 *(continued)*

Instruction	Illustration
Step 4: Initial assembly Assemble the nut by hand until contact of the body, cutting ring and nut becomes noticeable. Secure the adapter in a vise and insert the tube into the connector body so the tube bottoms out on the tube stop. The tube shall touch the tube stop to ensure that the cutting ring bites into the tube correctly.	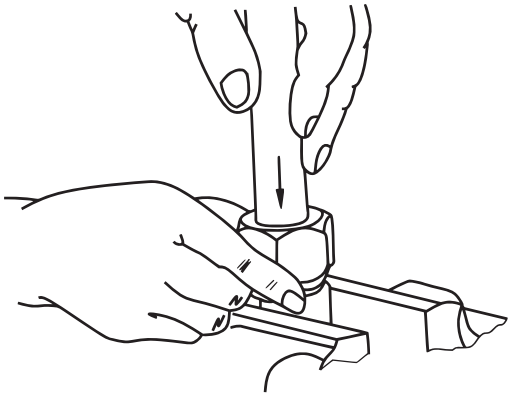
Step 5: Tightening Tighten the nut with a wrench according to the recommended number of wrenching turns specified by the manufacturer. NOTE Deviating from the recommended number of assembly turns can lead to reduced pressure performance and life expectancy of the tube connection. Leakage and tube slippage can occur.	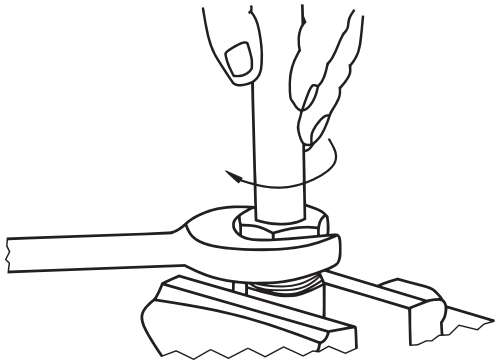
Step 6: Check Disassemble the tube connection. Check penetration of cutting edge. If the connector was assembled correctly, a ring of material distributed equally will be visible and should cover at least 80% of the front cutting edge. The cutting ring may turn on tube freely, but it should not be capable of axial displacement.	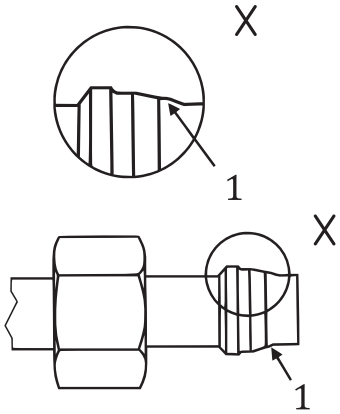 **Key** 1 ring of material
Step 7: Final assembly in the fitting body Assemble the nut by hand until contact of body, cutting ring and nut becomes noticeable. Tighten the nut according to the recommended number of wrenching turns as specified by the manufacturer from the point of noticeable increase in torque. Use a second wrench to hold the connector body firmly. NOTE Deviating from the recommended number of assembly turns can lead to reduced pressure performance and life expectancy of the tube connection. Leakage and tube slippage can occur.	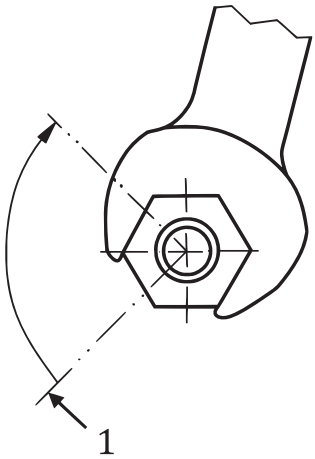

Table A.2 *(continued)*

Instruction	Illustration
	Key 1 noticeable increase in force
Re-assembly Each time the connector is disassembled, the nut shall be re-tightened firmly using the same torque as required for initial assembly. Hold the connector body firmly with one wrench, and turn nut with another wrench.	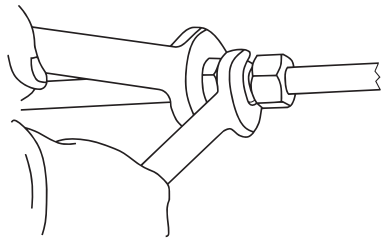
Minimum length of straight tube end for tube bends The length of undeformed straight tube (2 × h) shall be at least twice the length of the nut (h). The straight tube end may not exceed any deviation of roundness or straightness which exceeds the dimensional tolerances of the tube.	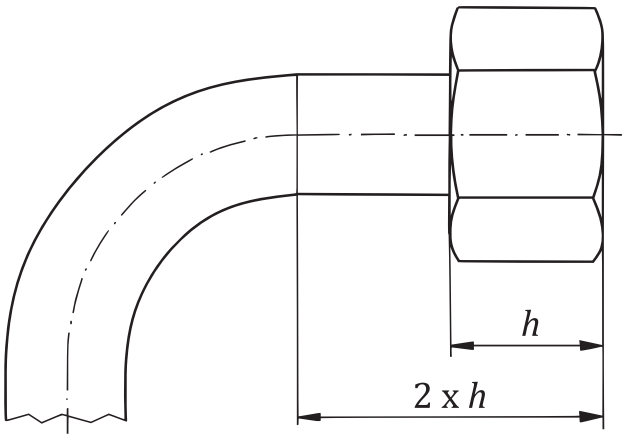

Bibliography

[1] ISO 228-2, *Pipe threads where pressure-tight joints are not made on the threads — Part 2: Verification by means of limit gauges*

[2] ISO 286-1, *Geometrical product specifications (GPS) — ISO code system for tolerances on linear sizes — Part 1: Basis of tolerances, deviations and fits)*

[3] ISO 286-2, *Geometrical product specifications (GPS) — ISO code system for tolerances on linear sizes — Part 2: Tables of standard tolerance classes and limit deviations for holes and shafts*

[4] ISO 1179-3, *Connections for general use and fluid power — Ports and stud ends with ISO 228-1 threads with elastomeric or metal-to-metal sealing — Part 3: Light-duty (L series) stud ends with sealing by O-ring with retaining ring (types G and H)*

[5] ISO 4397, *Fluid power connectors and associated components — Nominal outside diameters of tubes and nominal hose sizes*

[6] ISO 4399, *Fluid power systems and components — Connectors and associated components — Nominal pressures*

[7] ISO 10763, *Hydraulic fluid power — Plain-end, seamless and welded precision steel tubes — Dimensions and nominal working pressures*

[8] ISO 12151-2, *Connections for hydraulic fluid power and general use — Hose fittings — Part 2: Hose fittings with ISO 8434-1 and ISO 8434-4 24 degree cone connector ends with O-rings*

ICS 23.100.40

Price based on 51 pages