FINAL DRAFT

TECHNICAL SPECIFICATION

ISO/DTS 11686

ISO/TC **131**/SC **4**

Secretariat: **ANSI**

Voting begins on:
2023-05-11

Voting terminates on:
2023-07-06

Connectors for fluid power and general use — Assembly instructions for connectors with adjustable stud ends and O-ring sealing

Raccordements pour applications générales et transmissions hydrauliques — Instructions d'assemblage pour des connecteurs avec des éléments mâles ajustables et joint torique

RECIPIENTS OF THIS DRAFT ARE INVITED TO SUBMIT, WITH THEIR COMMENTS, NOTIFICATION OF ANY RELEVANT PATENT RIGHTS OF WHICH THEY ARE AWARE AND TO PROVIDE SUPPORTING DOCUMENTATION.

IN ADDITION TO THEIR EVALUATION AS BEING ACCEPTABLE FOR INDUSTRIAL, TECHNOLOGICAL, COMMERCIAL AND USER PURPOSES, DRAFT INTERNATIONAL STANDARDS MAY ON OCCASION HAVE TO BE CONSIDERED IN THE LIGHT OF THEIR POTENTIAL TO BECOME STANDARDS TO WHICH REFERENCE MAY BE MADE IN NATIONAL REGULATIONS.

Reference number
ISO/DTS 11686:2023(E)

© ISO 2023

COPYRIGHT PROTECTED DOCUMENT

© ISO 2023

All rights reserved. Unless otherwise specified, or required in the context of its implementation, no part of this publication may be reproduced or utilized otherwise in any form or by any means, electronic or mechanical, including photocopying, or posting on the internet or an intranet, without prior written permission. Permission can be requested from either ISO at the address below or ISO's member body in the country of the requester.

ISO copyright office
CP 401 • Ch. de Blandonnet 8
CH-1214 Vernier, Geneva
Phone: +41 22 749 01 11
Email: copyright@iso.org
Website: www.iso.org

Published in Switzerland

© ISO 2023 – All rights reserved

Contents

Page

Foreword ... **iv**

Introduction ... **v**

1 Scope ... **1**

2 Normative references ... **1**

3 Terms and definitions ... **1**

4 Instructions for the assembly of connectors with adjustable stud ends and O-ring sealing ... **1**

4.1 Preparation prior to assembly ... 1

4.2 Assembly ... 2

4.2.1 Illustration ... 2

4.2.2 Location of O-ring (Position 1 in Figure 1) ... 2

4.2.3 Positioning of locknut (Position 2 in Figure 1) ... 2

4.2.4 Installation of connector into the port (Position 3 in Figure 1) ... 2

4.2.5 Connector adjustment (Position 4 in Figure 1) ... 2

4.2.6 Final tightening (Position 5 in Figure 1) ... 3

4.2.7 Final inspection ... 3

Annex A (informative) **Identification of ports, stud ends and plugs and potential for incompatible intermixing** ... **4**

Bibliography ... **10**

© ISO 2023 – All rights reserved

Foreword

ISO (the International Organization for Standardization) is a worldwide federation of national standards bodies (ISO member bodies). The work of preparing International Standards is normally carried out through ISO technical committees. Each member body interested in a subject for which a technical committee has been established has the right to be represented on that committee. International organizations, governmental and non-governmental, in liaison with ISO, also take part in the work. ISO collaborates closely with the International Electrotechnical Commission (IEC) on all matters of electrotechnical standardization.

The procedures used to develop this document and those intended for its further maintenance are described in the ISO/IEC Directives, Part 1. In particular, the different approval criteria needed for the different types of ISO document should be noted. This document was drafted in accordance with the editorial rules of the ISO/IEC Directives, Part 2 (see www.iso.org/directives).

ISO draws attention to the possibility that the implementation of this document may involve the use of (a) patent(s). ISO takes no position concerning the evidence, validity or applicability of any claimed patent rights in respect thereof. As of the date of publication of this document, ISO had not received notice of (a) patent(s) which may be required to implement this document. However, implementers are cautioned that this may not represent the latest information, which may be obtained from the patent database available at www.iso.org/patents. ISO shall not be held responsible for identifying any or all such patent rights.

Any trade name used in this document is information given for the convenience of users and does not constitute an endorsement.

For an explanation of the voluntary nature of standards, the meaning of ISO specific terms and expressions related to conformity assessment, as well as information about ISO's adherence to the World Trade Organization (WTO) principles in the Technical Barriers to Trade (TBT), see www.iso.org/iso/foreword.html.

This document was prepared by Technical Committee ISO/TC 131, *Fluid power systems*, Subcommittee SC 4, *Connectors and similar products and components*.

This second edition cancels and replaces the first edition (ISO/TS 11686:2017), which has been technically revised.

The main changes are as follows:

— Figure 1 has been completely redrawn and Positions 4 and 5 have been corrected to accurately reflect the position of the washer, nut, O-ring and body.

— Figure 1 Position 3 and Figure 2 have been redrawn to remove horizontal line in the flowpath.

Any feedback or questions on this document should be directed to the user's national standards body. A complete listing of these bodies can be found at www.iso.org/members.html.

© ISO 2023 – All rights reserved

Introduction

In fluid power systems, power is transmitted and controlled through a fluid (liquid or gas) under pressure within an enclosed circuit. In general applications, a fluid may be conveyed under pressure.

Components may be connected through their ports by connections (connectors) and conductors (tubes and hoses). Tubes are rigid conductors; hoses are flexible conductors.

© ISO 2023 – All rights reserved

Connectors for fluid power and general use — Assembly instructions for connectors with adjustable stud ends and O-ring sealing

1 Scope

This document provides common installation instructions for all connectors that have adjustable stud ends and O-ring sealing. Conformance with the requirements of this document will result in a considerable reduction of leaks in hydraulic systems.

2 Normative references

The following documents are referred to in the text in such a way that some or all of their content constitutes requirements of this document. For dated references, only the edition cited applies. For undated references, the latest edition of the referenced document (including any amendments) applies.

ISO 5598, *Fluid power systems and components — Vocabulary*

3 Terms and definitions

For the purposes of this document, the terms and definitions given in ISO 5598 apply.

ISO and IEC maintain terminology databases for use in standardization at the following addresses:

— ISO Online browsing platform: available at https://www.iso.org/obp

— IEC Electropedia: available at https://www.electropedia.org/

4 Instructions for the assembly of connectors with adjustable stud ends and O-ring sealing

4.1 Preparation prior to assembly

4.1.1 To protect the sealing surfaces and prevent dirt and other contaminants from entering the system, protective caps and/or plugs shall not be removed until it is time to assemble the components.

4.1.2 Just prior to assembly, protective caps and/or plugs shall be removed, and the connector and the port shall be inspected to ensure that both mating parts are free of burrs, nicks, scratches or any foreign material.

4.1.3 If an O-ring is not present, one shall be installed on the port end of the connector using a proper O-ring installation tool, taking care not to cut or nick the O-ring.

4.1.4 The O-ring shall be lubricated with a light coat of system fluid or compatible oil.

© ISO 2023 – All rights reserved

4.2 Assembly

4.2.1 Illustration

Figure 1 illustrates the steps specified in 4.2.2 through 4.2.6 and the final assembly.

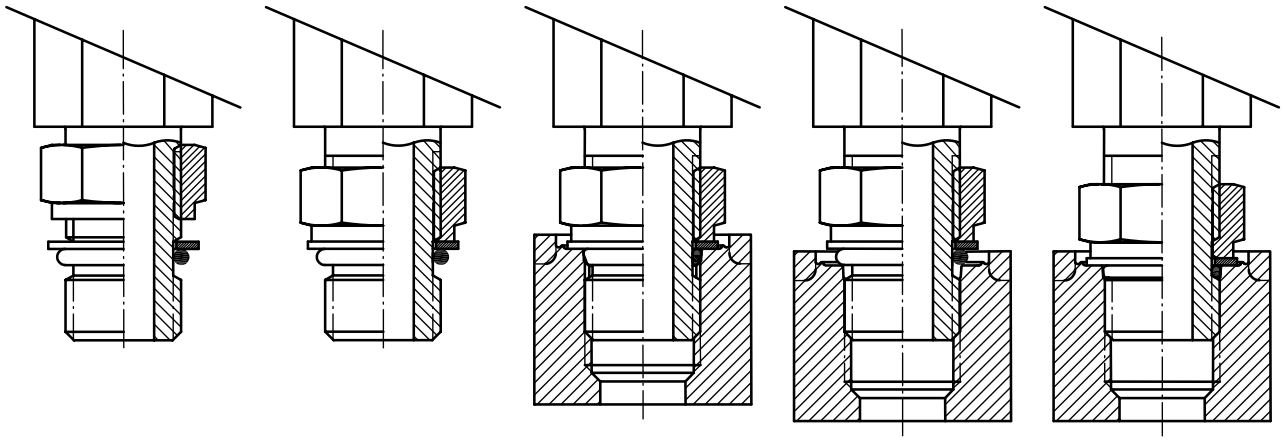

a) Position 1: Locknut and washer backed off with O-ring in position (see 4.2.2)

b) Position 2: Locknut in position to protect the back-up washer from damage during installation into the port (see 4.2.3)

c) Position 3: Hand tightened into port until back-up washer contacts port face (see 4.2.4)

d) Position 4: Connector backed off for alignment to mating connector, tube assembly or hose assembly (see 4.2.5)

e) Position 5: Connector tightened to final position (see 4.2.6)

Figure 1 — Illustration of instructions for assembling connectors with adjustable stud ends and O-ring sealing

4.2.2 Location of O-ring (Position 1 in Figure 1)

The O-ring should be located in the groove adjacent to the face of the back-up washer. The washer and O-ring should be positioned at the extreme top end of the groove as shown in Position 1 of Figure 1.

4.2.3 Positioning of locknut (Position 2 in Figure 1)

Position the locknut to just touch the back-up washer as shown in Position 2 of Figure 1. Having the locknut in this position will eliminate potential damage to the back-up washer during the next step (see 4.2.4).

4.2.4 Installation of connector into the port (Position 3 in Figure 1)

Install the connector into the port until the back-up washer contacts the face of the port as shown in Position 3 of Figure 1.

CAUTION — Overtightening beyond contact may cause damage to the back-up washer if the washer is not supported by the locknut.

4.2.5 Connector adjustment (Position 4 in Figure 1)

Adjust the connector to the proper position by turning it out, in a counterclockwise manner, up to a maximum of one turn as shown in Position 4 of Figure 1, to provide proper alignment with the mating connector, tube assembly or hose assembly.

© ISO 2023 – All rights reserved

4.2.6 Final tightening (Position 5 in Figure 1)

Using two wrenches, use the backup wrench to hold the connector in the desired position and then use the torque wrench to tighten the locknut to the appropriate torque level given by the manufacturer.

4.2.7 Final inspection

Visually inspect, where possible, the joint to ensure that the O-ring is not pinched or bulging out from under the washer and that the backup washer is properly seated flat against the face of the port. Figure 2 provides an illustration of the final assembly.

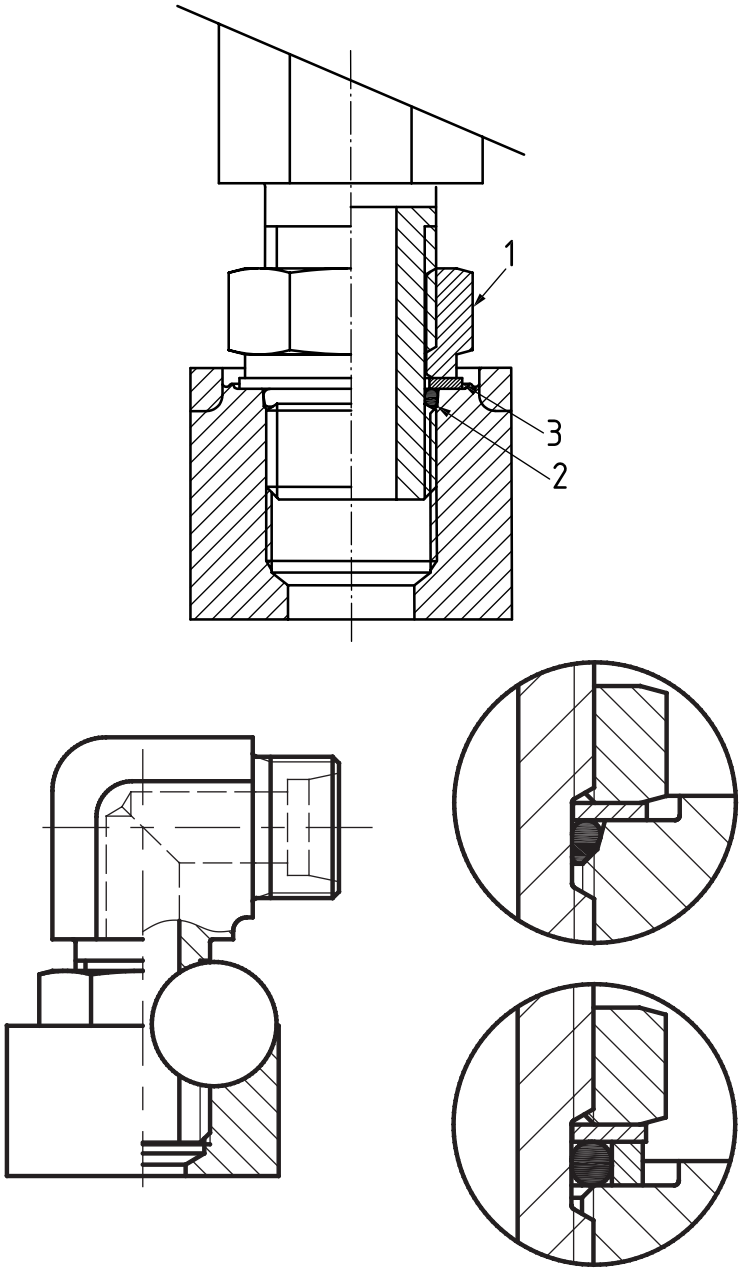

Key

1 locknut

2 O-ring

3 back-up washer

Figure 2 — Illustrations of final assembly of adjustable stud ends with O-ring sealing

© ISO 2023 – All rights reserved

Annex A
(informative)

Identification of ports, stud ends and plugs and potential for incompatible intermixing

A.1 General

Table A.1 provides a summary of

a) how to identify the most common ports, stud ends and plugs used in hydraulic fluid power systems and

b) how ports and stud ends of different types can potentially be intermixed in an incompatible way, which should be avoided.

For threaded ports and stud ends specified in new designs in hydraulic fluid power applications, the ISO 6149 series should be used because these International Standards specify ports and stud ends with metric threads and O-ring sealing and because the sub-committee would like to help users by recommending one preferred system. The threaded ports and stud ends shin according to the ISO 1179 series, ISO 9974 series and ISO 11926 series should not be used for new designs in hydraulic fluid power applications; these International Standards will be maintained because they specify ports and stud ends that are currently used in hydraulic systems worldwide.

© ISO 2023 – All rights reserved

Table A.1 — Identification of ports, stud ends and plugs and potential for incompatible intermixing

Standard	Illustration of ports	Illustration of stud ends	Potential for incompatible intermixing
ISO 1179 (all parts)	ISO 1179-1 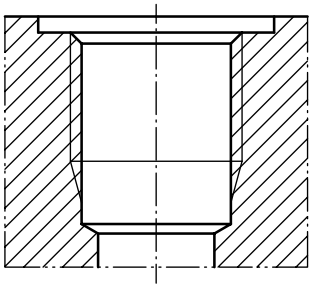	ISO 1179-2 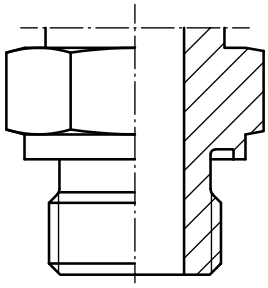 ISO 1179-3 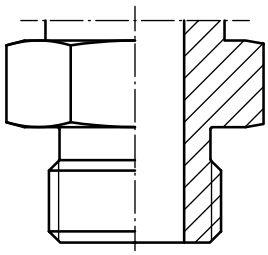 ISO 1179-4 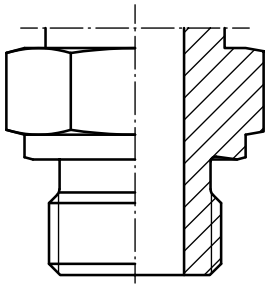	Size G 1/8 stud end fits into M10 × 1 port (ISO 6149-1 and ISO 9974-1) Size G 1/4 stud end fits into M14 × 1,5 port (ISO 6149-1 and ISO 9974-1) Size G 1/2 stud end fits into M22 × 1,5 port (ISO 6149-1 and ISO 9974-1 Size G 3/4 stud end fits into M27 × 2 port (ISO 6149-1 and ISO 9974-1)

© ISO 2023 – All rights reserved

Table A.1 *(continued)*

Standard	Illustration of ports	Illustration of stud ends	Potential for incompatible intermixing
ISO 6149 (all parts)	ISO 6149-1 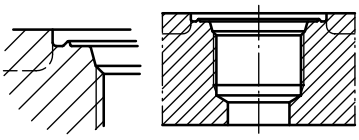	ISO 6149-2 and ISO 6149-3 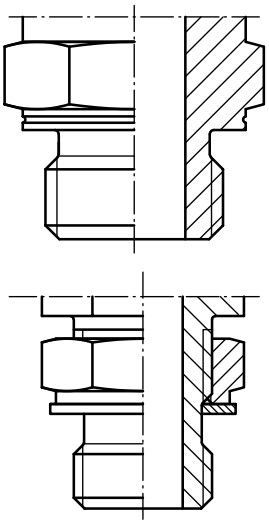 ISO 6149-4 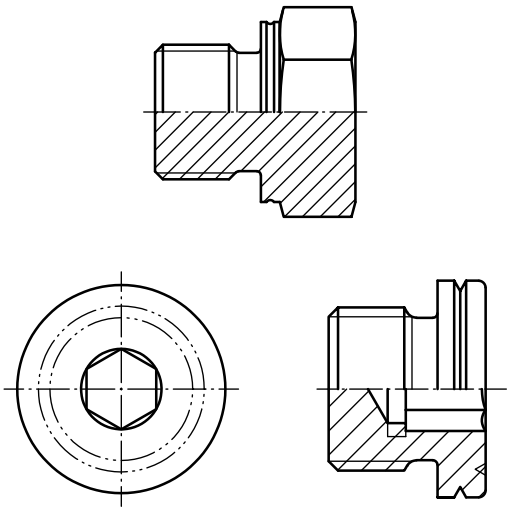	Several sizes of ISO 11926 (See Table A.2) M12 × 1,5 stud end fits into G 1/4 port (ISO 1179-1) M16 × 1,5 stud end fits into G 3/8 port (ISO 1179-1) M20 × 1,5 stud end fits into G 1/2 port (ISO 1179-1)

© ISO 2023 – All rights reserved

Table A.1 *(continued)*

Standard	Illustration of ports	Illustration of stud ends	Potential for incompatible intermixing
ISO 9974 (all parts)	ISO 9974-1 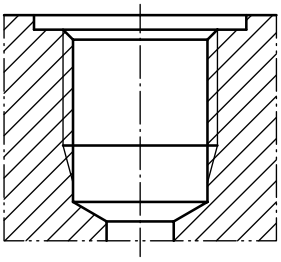	ISO 9974-2 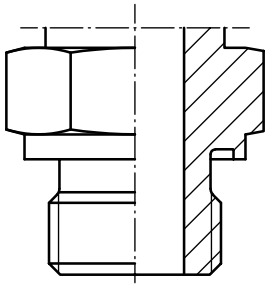 ISO 9974-3 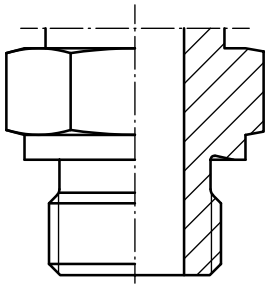 ISO 9974-4 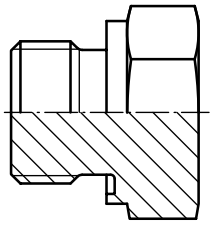 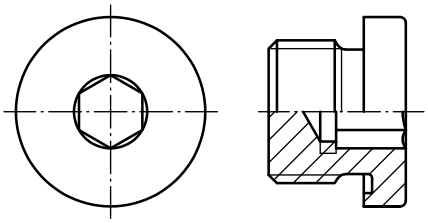	Several sizes of ISO 11926 (see Table A.2) M12 × 1,5 stud end fits into G 1/4 port (ISO 1179-1) M16 × 1,5 stud end fits into G 3/8 port (ISO 1179-1) M20 × 1,5 stud end fits into G 1/2 port (ISO 1179-1) M26 × 1,5 stud end fits into G 3/4 port (ISO 1179-1)

© ISO 2023 – All rights reserved

Table A.1 *(continued)*

Standard	Illustration of ports	Illustration of stud ends	Potential for incompatible intermixing
ISO 11926 (all parts)	ISO 11926-1 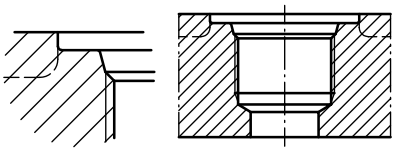	ISO 11926-2 and ISO 11926-3 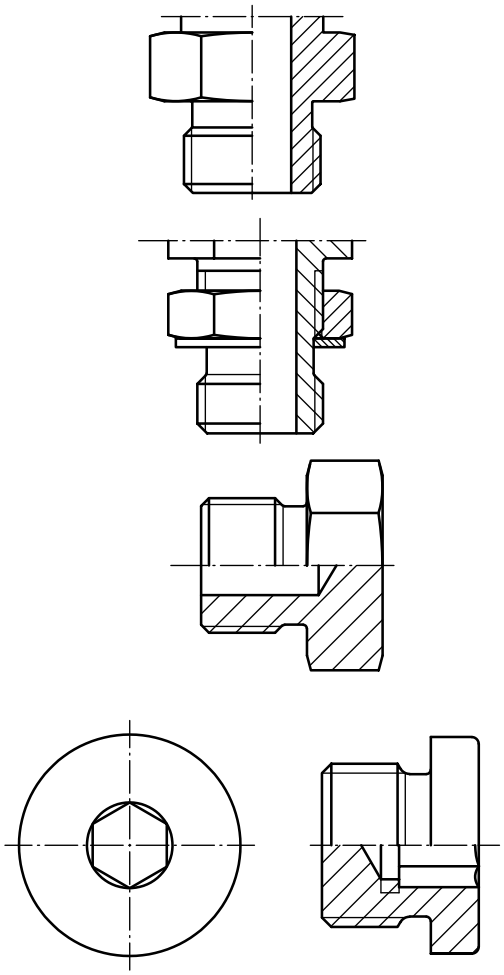	Potential incompatible intermixing with several sizes in the ISO 6149 series, the ISO 1179 series and the ISO 9974 series (see Table A.2)

A.2 Potential incompatible intermixing of ports and stud ends with UNF or UN threads and metric threads

Table A.2 provides detailed information about potential incompatible intermixing of ports and stud ends with UNF or UN threads (ISO 11926 series) and metric threads (ISO 6149 and ISO 9974 series). It also provides information about the one potential incompatible intermixing of ports with 9/16-18 UNF threads (ISO 11926 series) and stud ends with G 1/4 threads (ISO 1179-2 and ISO 1179-3).

Table A.2 — Degree of potential for incompatible intermixing of ports and stud ends with UNF or UN threads and metric threads

	UNF						UN					
	3/8–24	7/16–20	1/2–20	9/16–18	3/4–16	7/8–14	1 1/16–12	1 3/16–12	1 5/16–12	1 5/8–12	1 7/8–12	2 1/2–12
M8 × 1	No	No	No	No	No	No	No	No	No	No	No	No
M10 × 1	No	No	No	No	No	No	No	No	No	No	No	No

[a] Stud end with metric threads fits into port with UNF or UN threads.

[b] In the case of a port with 9/16–18 UNF threads, a stud end with G 1/4 threads fits into the port with 9/16–18 UNF threads.

[c] Stud end with UNF or UN thread fits into port with metric thread.

© ISO 2023 – All rights reserved

Table A.2 *(continued)*

	UNF						UN					
	3/8–24	**7/16–20**	**1/2–20**	**9/16–18**	**3/4–16**	**7/8–14**	**1 1/16–12**	**1 3/16–12**	**1 5/16–12**	**1 5/8–12**	**1 7/8–12**	**2 1/2–12**
M12 × 1,5	No	No	Yes [a]	No	No	No	No	No	No	No	No	No
M14 × 1,5	No	No	No	Yes [a, b]	No	No	No	No	No	No	No	No
M16 × 1,5	No	No	No	No	No	No	No	No	No	No	No	No
M18 × 1,5	No	No	No	No	Yes [a]	No	No	No	No	No	No	No
M20 × 1,5	No	No	No	No	No	No	No	No	No	No	No	No
M22 × 1,5	No	No	No	No	No	Yes [a, c]	No	No	No	No	No	No
M27 × 2	No	No	No	No	No	No	Yes [a, c]	No	No	No	No	No
M30 × 2	No	No	No	No	No	No	No	No	No	No	No	No
M33 × 2	No	No	No	No	No	No	No	No	Yes [a, c]	No	No	No
M42 × 2	No	No	No	No	No	No	No	No	No	Yes [c]	No	No
M48 × 2	No	No	No	No	No	No	No	No	No	No	Yes [c]	No
M60 × 2	No	No	No	No	No	No	No	No	No	No	No	No

[a] Stud end with metric threads fits into port with UNF or UN threads.

[b] In the case of a port with 9/16–18 UNF threads, a stud end with G 1/4 threads fits into the port with 9/16–18 UNF threads.

[c] Stud end with UNF or UN thread fits into port with metric thread.

© ISO 2023 – All rights reserved

Bibliography

[1] ISO 1179-1, *Connections for general use and fluid power — Ports and stud ends with ISO 228-1 threads with elastomeric or metal-to-metal sealing — Part 1: Threaded ports*

[2] ISO 1179-2, *Connections for general use and fluid power — Ports and stud ends with ISO 228-1 threads with elastomeric or metal-to-metal sealing — Part 2: Heavy-duty (S series) and light-duty (L series) stud ends with elastomeric sealing (type E)*

[3] ISO 1179-3, *Connections for general use and fluid power — Ports and stud ends with ISO 228-1 threads with elastomeric or metal-to-metal sealing — Part 3: Light-duty (L series) stud ends with sealing by O-ring with retaining ring (types G and H)*

[4] ISO 1179-4, *Connections for general use and fluid power — Ports and stud ends with ISO 228-1 threads with elastomeric or metal-to-metal sealing — Part 4: Stud ends for general use only with metal-to-metal sealing (type B)*

[5] ISO 6149-1, *Connections for hydraulic fluid power and general use — Ports and stud ends with ISO 261 metric threads and O-ring sealing — Part 1: Ports with truncated housing for O-ring seal*

[6] ISO 6149-2, *Connections for hydraulic fluid power and general use — Ports and stud ends with ISO 261 metric threads and O-ring sealing — Part 2: Dimensions, design, test methods and requirements for heavy-duty (S series) stud ends*

[7] ISO 6149-3, *Connections for hydraulic fluid power and general use — Ports and stud ends with ISO 261 metric threads and O-ring sealing — Part 3: Dimensions, design, test methods and requirements for light-duty (L series) stud ends*

[8] ISO 6149-4, *Connections for fluid power and general use — Ports and stud ends with ISO 261 metric threads and O-ring sealing — Part 4: Dimensions, design, test methods and requirements for external hex and internal hex port plugs*

[9] ISO 8434-2, *Metallic tube connections for fluid power and general use — Part 2: 37° flared connectors*

[10] ISO 8434-3, *Metallic tube connections for fluid power and general use — Part 3: O-ring face seal connectors*

[11] ISO 8434-6, *Metallic tube connections for fluid power and general use — Part 6: 60° cone connectors with or without O-ring*

[12] ISO 9974-1, *Connections for general use and fluid power — Ports and stud ends with ISO 261 threads with elastomeric or metal-to-metal sealing — Part 1: Threaded ports*

[13] ISO 9974-2, *Connections for general use and fluid power — Ports and stud ends with ISO 261 threads with elastomeric or metal-to-metal sealing — Part 2: Stud ends with elastomeric sealing (type E)*

[14] ISO 9974-3, *Connections for general use and fluid power — Ports and stud ends with ISO 261 threads with elastomeric or metal-to-metal sealing — Part 3: Stud ends with metal-to-metal sealing (type B)*

[15] ISO 9974-4, *Connections for general use and fluid power — Ports and stud ends with ISO 261 threads with elastomeric or metal-to-metal sealing — Part 4: Dimensions, design, test methods and requirements for external hex and internal hex port plugs*

[16] ISO 11926-1, *Connections for general use and fluid power — Ports and stud ends with ISO 725 threads and O-ring sealing — Part 1: Ports with O-ring seal in truncated housing*

[17] ISO 11926-2, *Connections for general use and fluid power — Ports and stud ends with ISO 725 threads and O-ring sealing — Part 2: Heavy-duty (S series) stud ends*

© ISO 2023 – All rights reserved

[18] ISO 11926-3, *Connections for general use and fluid power — Ports and stud ends with ISO 725 threads and O-ring sealing — Part 3: Light-duty (L series) stud ends*

[19] ISO 12151-4, *Connections for hydraulic fluid power and general use — Hose fittings — Part 4: Hose fittings with ISO 6149 metric stud ends*

© ISO 2023 – All rights reserved

ICS 23.100.40
Price based on 11 pages

© ISO 2023 – All rights reserved